DRAFT - Sand Hill Pump Station Pumps

NP 3202 SH 3~ 273

Technical specification

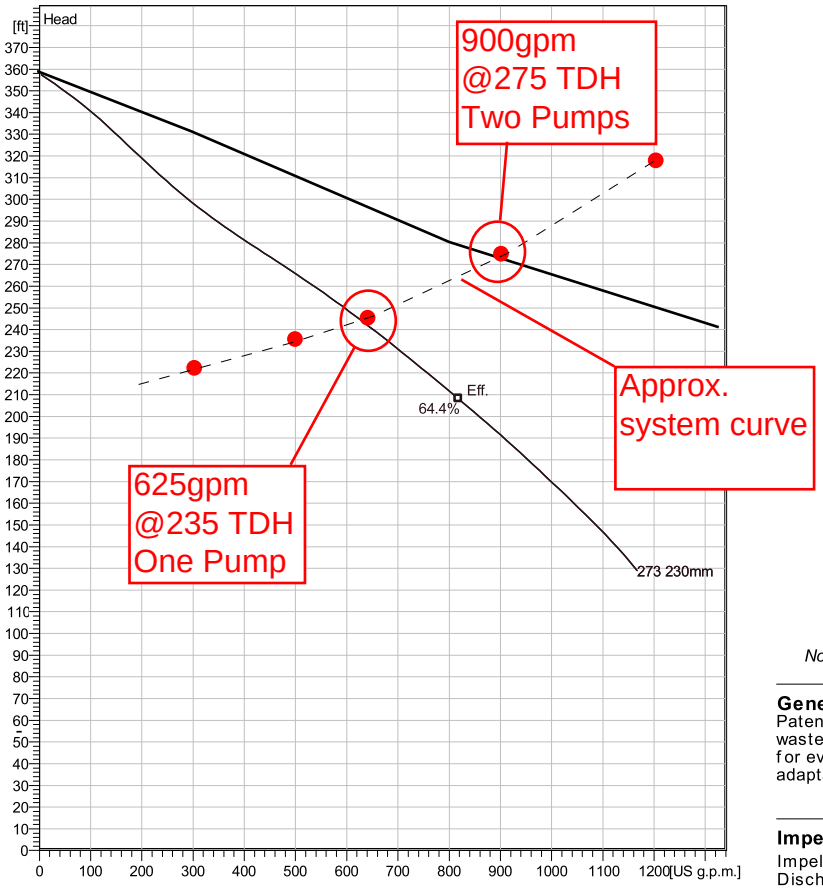

Water, pure *Curve ISO*

Note: Picture might not correspond to the current configuration.

Installation: P - Semi permanent, Wet

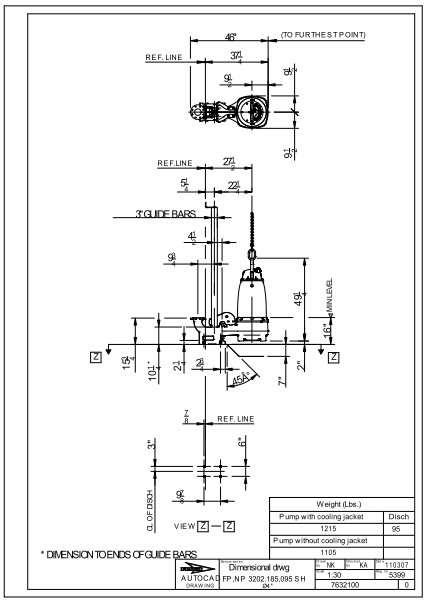

General

Patented self cleaning semi-open channel impeller, ideal for pumping in waste water applications. Possible to be upgraded with Guide-pin® for even better clogging resistance. Modular based design with high adaptation grade.

Impeller

Impeller material	Hard-Iron ™
Discharge Flange Diameter	3 15/16 inch
Inlet diameter	5 7/8 inch
Impeller diameter	230 mm
Number of blades	2

Motor

Motor #	N3202.095 30-27-2AA-W 72hp
Approval	FM
Stator variant	1
Frequency	60 Hz
Rated voltage	460 V
Number of poles	2
Phases	3~
Rated power	72 hp
Rated current	78 A
Starting current	550 A
Rated speed	3550 rpm
Power factor	
1/1 Load	0.93
3/4 Load	0.92
1/2 Load	0.88
Pump Efficiency	
1/1 Load	92.5 %
3/4 Load	93.0 %
1/2 Load	92.5 %

Configuration

Project	Project ID	Created by	Created on	Last update
			28.06.2016	

NP 3202 SH 3~ 273

Performance curve

Pump

Discharge Flange Diameter	3 15/16 inch
Inlet diameter	150 mm
Impeller diameter	9 1/16"
Number of blades	2

Motor

Motor #	N3202.095 30-27-2AA-W 72hp
Approval	FM
Stator variant	1
Frequency	60 Hz
Rated voltage	460 V
Number of poles	2
Phases	3~
Rated power	72 hp
Rated current	78 A
Starting current	550 A
Rated speed	3550 rpm

Power factor	
1/1 Load	0.93
3/4 Load	0.92
1/2 Load	0.88

Pump Efficiency	
1/1 Load	92.5 %
3/4 Load	93.0 %
1/2 Load	92.5 %

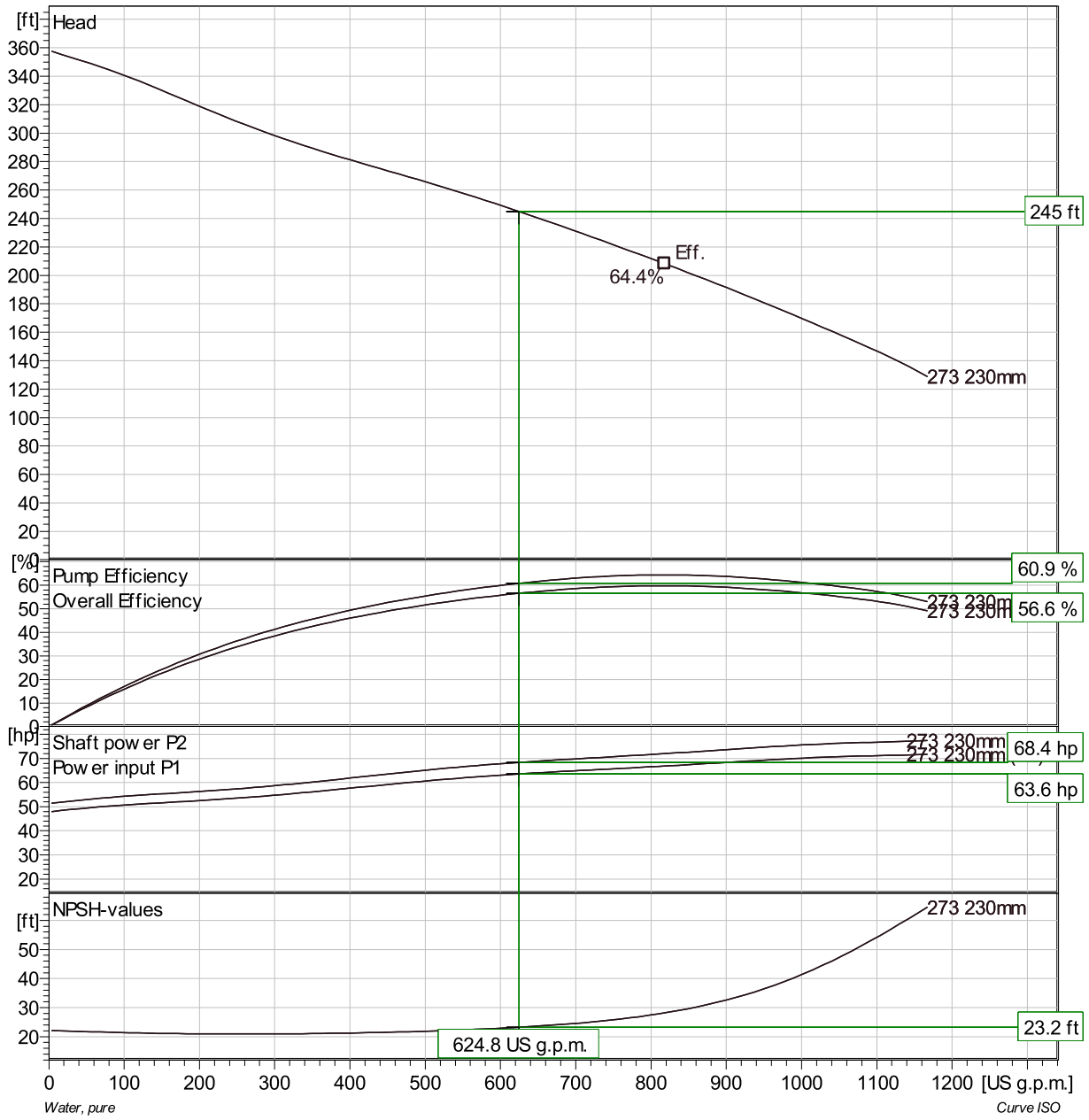

Project	Project ID	Created by	Created on	Last update
			28.06.2016	

NP 3202 SH 3~ 273

Duty Analysis

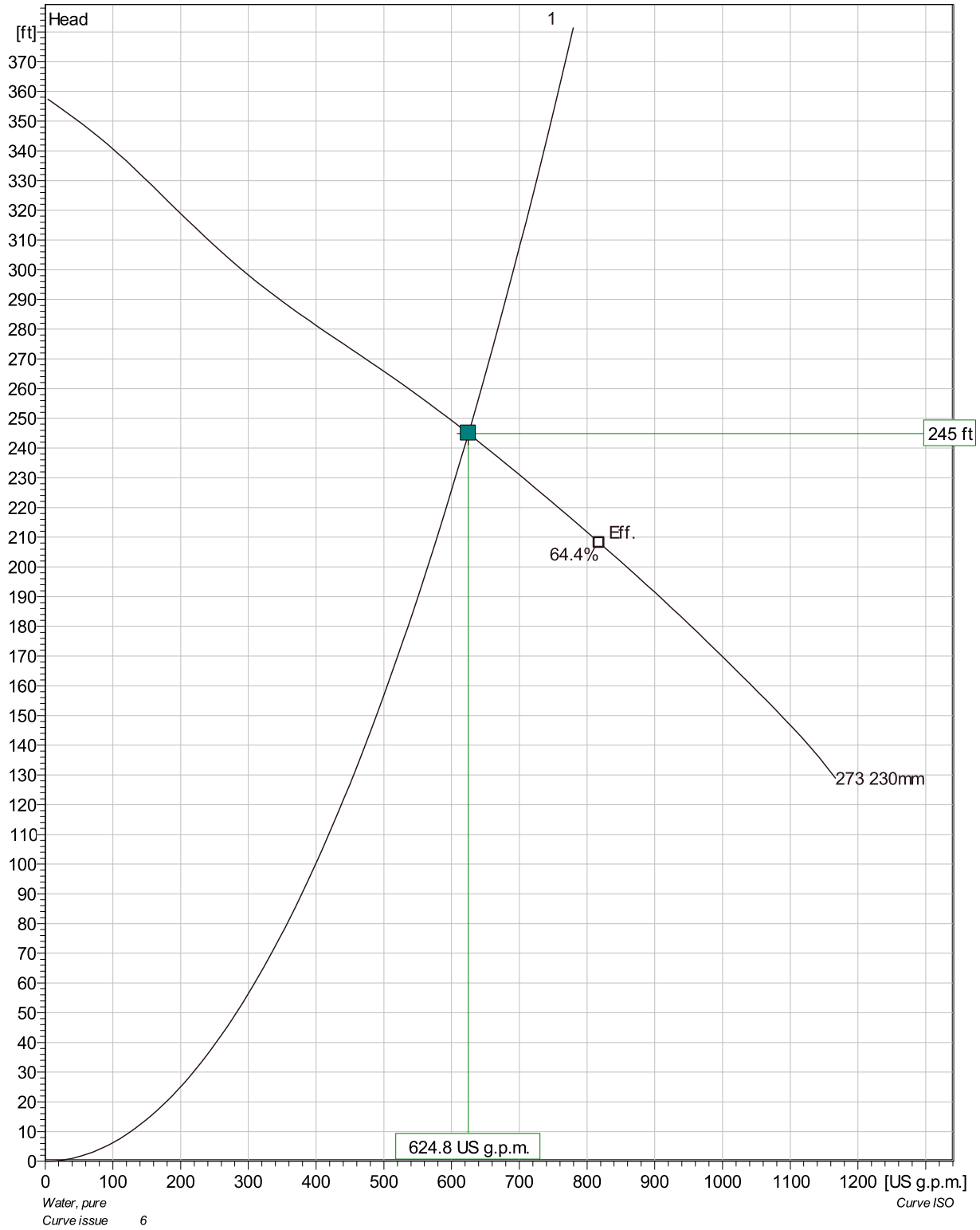

Pumps running /System	Individual pump Flow	Head	Shaft power	Total Flow	Head	Shaft power	Pump eff.	Specific energy	NPSHre
1	625 US g.p.m.	245 ft	63.6 hp	625 US g.p.m.	245 ft	63.6 hp	60.9 %	1360 kWh/US MG	23.2 ft

Project	Project ID	Created by	Created on	Last update
			28.06.2016	

NP 3202 SH 3~ 273

Dimensional drawing

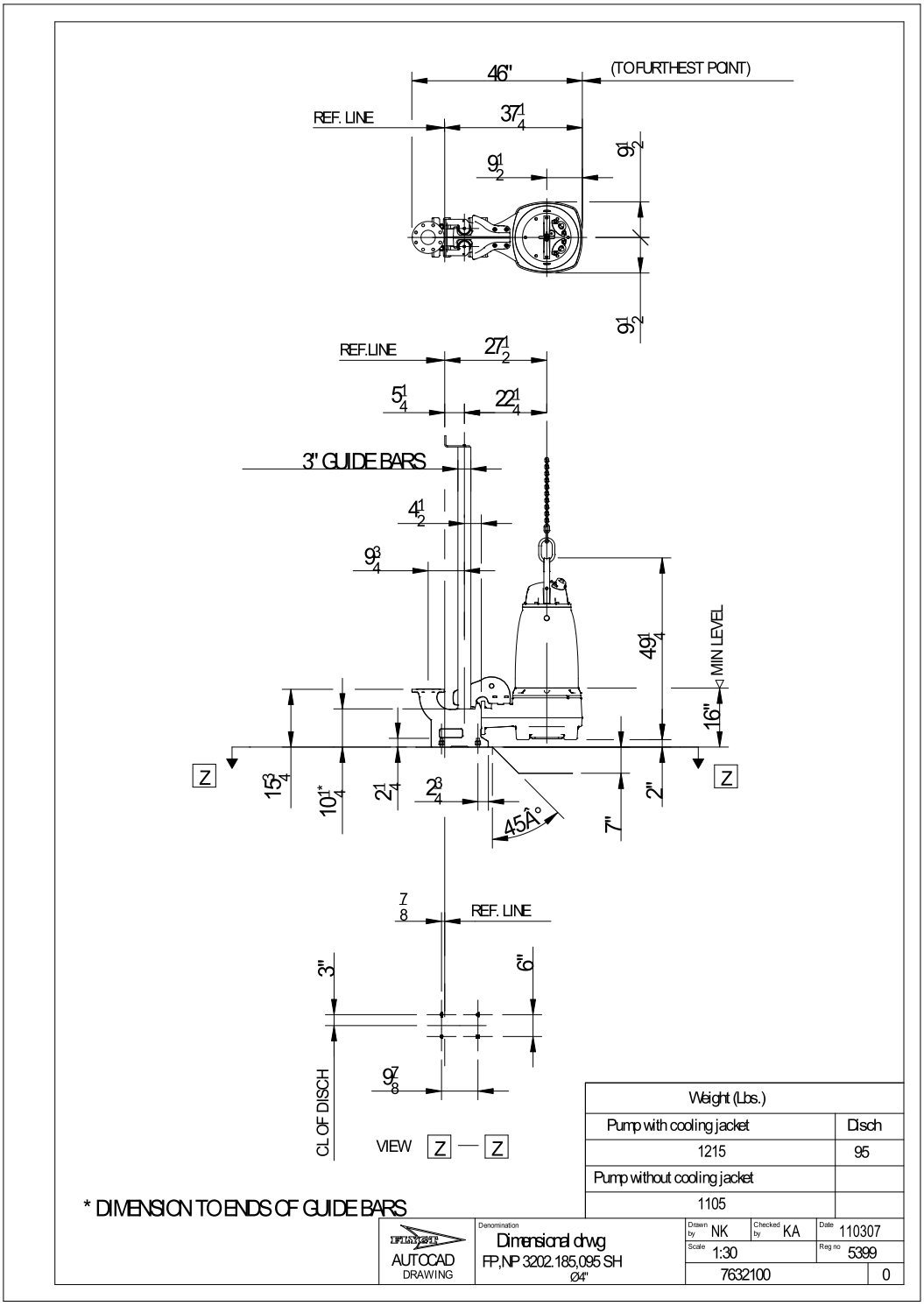

Project	Project ID	Created by	Created on	Last update
			28.06.2016	