1902 - Serving Our Community for over 115 Years - 2018

WEST BAY SANITARY DISTRICT
AGENDA OF BUSINESS
REGULAR MEETING OF THE DISTRICT BOARD
WEDNESDAY, AUGUST 8, 2018 AT 7:00 P.M.
RONALD W. SHEPHERD ADMINISTRATION BUILDING,
500 LAUREL STREET, MENLO PARK, CALIFORNIA 94025

Board Members
Edward P. Moritz, President
Fran Dehn, Secretary
Roy Thiele-Sardiña, Treasurer
David Walker, Member
George Otte, Member

District Manager
Phil Scott

District Legal Counsel
Anthony Condotti, Esq.

AGENDA OF BUSINESS

NOTE: The Board may take action on any agendized item unless specifically designated a "discussion" item or a "report."

1. Call to Order and Roll Call
2. Communications from the Public
3. District Manager's Report Pg. 3-1
4. Consent Calendar

   Matters listed under this item are considered routine and will be enacted by one motion. The motion, seconds, and vote are applicable to any included resolutions and recorded accordingly. There will be no separate discussion of these items unless specifically requested by a member of the Board.

   A. Approval of Minutes for Regular meeting July 11, 2018 Pg. 4A-1

   B. Approval of the Withdrawal Order Authorizing Payment of Certain Bills and Salaries and Consideration of Other Financial Matters for August 8, 2018 Pg. 4B-1

   C. Consider to Ratify and Approve Report on District's Investment Portfolio Including the Transactions of Assets Described Therein as of 06/30/18 Pg. 4C-1

5. Consider Adopting Resolution to Amend and Extend the Maintenance Services Agreement Between West Bay Sanitary District And The Town Of Los Altos Hills For The Operation And Maintenance Of The Los Altos Hills Sanitary Sewer System And Authorize The District Manager To Execute the Second Amendment to the Agreement Pg. 5-1
6. Consider Adoption Of Resolution Approving Amendment No. 5 To The Maintenance Services Agreement Between West Bay Sanitary District And The Town Of Woodside For Sanitary Sewer Maintenance Services for The Town of Woodside And Authorize The District Manager To Execute the Amended Agreement On Behalf Of The District Pg. 6-1

7. Consideration to Approve the Pre-Audit Preliminary FY2017-18 Internal Financial Statements & Analysis of Financial Position for the Fiscal Year ending 6/30/2018 Pg. 7-1

8. Discussion and Direction on Recycled Water Projects - Sharon Heights & Bayfront, Including Project Status Pg. 8-1

9. Report & Discussion on South Bayside Waste Management Authority (SBWMA) Pg. 9-1

10. Report & Discussion on Silicon Valley Clean Water (SVCW) and Discussion on SVCW CIP Program and Financing Pg. 10-1

11. Closed Session:

    A. CONFERENCE WITH LABOR NEGOTIATORS
    (Pursuant to Cal. Govt. Code §54957.6)
    Agency designated representatives: District Manager, Legal Counsel
    Employee Organization/Unrepresented Employees: Teamsters Local 350

    B. CONFERENCE WITH LEGAL COUNSEL – EXISTING LITIGATION
    (Cal. Govt. Code §54956.9(d))
    Name of Case: *1740 Oak Avenue, LP v. West Bay Sanitary District, et al.* – SMCSC Case No. 18CIV02183

    C. CONFERENCE WITH LEGAL COUNSEL—WORKERS' COMPENSATION CLAIM
    (Pursuant to Cal. Govt. Code Section 54956.9)
    Claimants: Alberto Patino

12. Comments or Reports from Members of the District Board and Consider Items to be Placed on Future Agenda

13. Adjournment

The West Bay Sanitary District does not discriminate against persons with disabilities. Upon request, the agenda and agenda packet can be provided in a format to accommodate special needs. If you require a copy of the agenda or related materials in an alternative format to accommodate a disability, or if you wish to attend this public meeting and will require special assistance or other special equipment, please call the District at (650) 321-0384 at least five days in advance and we will make every reasonable attempt to provide such an accommodation.

WEST BAY
Sanitary District

WEST BAY SANITARY DISTRICT
AGENDA ITEM 3

To: ***Board of Directors***

From: ***Phil Scott, District Manager***

Subject: ***District Manager's Report***

1. **CIP Project:**
   a) Belle Haven III CIP construction began July 23.
2. **Affiliate Agency/Association News**:
   a) **County:** District Staff, District Counsel, County Staff and LAFCo are all reviewing a draft Lafco application, Resolutions and MOUs for transferring the Solid Waste Franchise to the County. The County has indicated their preference for assignment of the franchise to be effective January 1, 2020 and will need through September to review and comment on the documents.
   b) **County Grand Jury:** The Grand Jury has issued an advance copy to the SBWMA of the final report titled " South Bayside Waste Management Authority Board: Stakeholder Satisfaction with a Board of Elected Officials". The District has not received a copy yet. The Executive Director has indicated the report finds the transition to elected officials satisfactory, and identified the need to improve clarity of the website, and identified a need to reinstitute the agency's annual report.
   c) **LAFCo:** Election results for Special Districts' LAFCo representative are that Joshua Cosgrove of North Coast County Water District received 9 votes and Fran Dehn of West Bay Sanitary District received 3 votes. Mr. Cosgrove's term will be through May 2022.
   d) **Elections:** Candidacy filing period is from July 16 through August 10. District has 2 Full Term Offices vacant and 1 Short Term Office vacant.

3. Upcoming Events:
   a) **Board meetings**: August 22
   b) **Movie Night**: District is sponsoring the City of Menlo Park movie night on August 10th.
   c) **Block Party**: District will have a booth for the Block Party on August 16.

4) Misc./Action Items from Previous Meeting:
   a) **SSOs:** Zero SSOs for July. Total 3 = 2018
   b) **LAH & TOW:** Staffs of each agency have agreed to Amendments to each of the maintenance agreements with Towns of Woodside and Los Altos Hills. Formal approval pending.
   c) **IEDA:** Mr. Murray who has consulted with the District over the last 4 labor negotiations has retired. His replacement is Bruce Heid. See attached email.

From:	Darrell Murray
To:	Rebecca Mendenhall; Angie Rodriguez; Lisa M. Lopez; Cynthia Human Res. Baron; Judy Dias; gpak@amadorgov.org; Karen Scaccianoce; Chuck Iley; Ericka Mitchell; Andrew Murray; Amy Tobin; June Catalano; Phil Smith; Phil Scott; Yoshii, Michi, Human Res.; Tate, Mecole, Human Res.; Tecson, Ian Ivan, Human Res.; Margaret Thurman; Mary McCarthy; Teresa Herrera (THerrera@svcw.org); Matt Anderson; dhuynh@acgov.org; Long, Ian, Probation; Monte Hamamoto; Jennifer Flick; Appleyard, Ian; itennant@jfc.com; Allen, Gerry; Germone, Gary; Gregory Gillott; Ehmen-Krause, Esa, Probation; toniaP@acgov.org; Dena Humphrey; Wong, Annie, Human Res.; bhopson@acgov.org; Lavender, Ava, Human Res.; jody.pollak@acgov.org; DORobinson@acgov.org; Weddle, Andrea L., County Counsel; wbulda@acgov.org; donna.ziegler@acgov.org; Robynn Losee; Nora Johnson; Takeshi Yoshino; Wooten, Stacey, Probation; Michael Guina; mburrows@bart.gov; DBoler@acgov.org; LVanDerPol.smcs@perb.ca.gov; Erik (erikh@msmosquito.com); ron@shepherd-insurance.com; Sarah Duarte; Lisa Gaebe; Joe.Saccio@CityofPaloAlto.org; Ron Feldman; Janet Coleson; Licano, Debra, Probation; Samantha Kelman; Shellie Anderson; CPrince@acgov.org; Lalo.Perez@CityofPaloAlto.org; maryjo.decoulode@acgov.org; MMartin@bart.gov; James.Keene@CityofPaloAlto.org; thomas.hock@veoliatransdev.com; Erica.Grant@acgov.org; Grace, Tim (Tgrace@Guittard.com); tonia.espinoza@acgov.org; aracelia.esparza@acgov.org; mdawal@acgov.org; acondotti@abc-law.com; dwhite@fairfield.ca.gov; Callahan, Joany, Sheriff; jbrown@acgov.org
Cc:	Bruce Heid; Keith Fleming; Fran Buchanan; Glenn Berkheimer; Gregory Ramirez; Austris Rungis; Stacey Cue; Cindy Oilar; jmaltbie@cityofsancarlos.org; Elizabeth Montano; Greg Tremo; Josie Johnson; Lydia Rubalcaba; Pat Ballesteros; Tony Angelo
Subject:	The blueberry field
Date:	Wednesday, August 01, 2018 12:03:14 AM

Dear Friends and Colleagues:

The time has come for me to conclude my participation in the full-time workforce. My retirement will officially commence September 1. Those of you who are current clients will be contacted by Bruce Heid in the near future to discuss transitions. He and I have been working on that for some time in anticipation of this change. Rest assured that services will continue without interruption. I will continue working with those of you with whom I have on-going business until the end of August.

When I was five years old, the summer before I began first grade, I had my first full-time summer job. I picked blueberries at a field just a half mile from my home on the McKenzie River northeast of Eugene. I have had many jobs since that first year in the field: farm worker, car washer, custodian, reader for the blind, director of labor relations for two counties and one transit agency, a mediator, and a labor relations consultant. Throughout the 44 years of my career I sought to further constructive goals insofar as circumstances would allow, but also to have some fun in the process. With your help I have been able to achieve a good deal of each of these goals. I have had many good times, filled with humor, and have done what I felt I could to keep the earth spinning in its reassuring if somewhat erratic way. Thanks to each of you, for helping make my journey through the world of work one worth savoring. I will reflect fondly on our time together.

1902 - Serving Our Community for over 110 Years - 2018

WEST BAY SANITARY DISTRICT
MINUTES OF THE REGULAR MEETING OF THE DISTRICT BOARD
WEDNESDAY, JULY 11, 2018 AT 7:00 P.M.

1. Call to Order

President pro tem Dehn called the meeting to order at 7:02 PM

Roll Call

BOARD MEMBERS PRESENT:	Dehn (President pro-tem), Thiele-Sardiña, Walker (Secretary pro-tem), Otte
BOARD MEMBERS ABSENT:	Moritz
STAFF MEMBERS PRESENT:	Scott, Condotti
Others Present:	Dave Richardson - Woodard & Curran

2. Communications from the Public: None

3. Public Hearing: Consideration of Resolution Confirming Report on Sewer Service Charges for West Bay Sanitary District for the Fiscal Year 2018/2019

Open Public Hearing:
Motion by: Walker 2nd by: Otte Vote: AYE: 4 NAY: 0 Abstain: 0

Comments: None

Close Public Hearing:
Motion by: Walker 2nd by: Otte Vote: AYE: 4 NAY: 0 Abstain: 0

4. Consideration of Resolution Confirming Report on Sewer Service Charges for West Bay Sanitary District for the Fiscal Year 2018/2019

Motion by: Thiele-Sardiña 2nd by: Walker Vote: AYE: 4 NAY: 0 Abstain: 0

Comments: DM presented the report to the Board which outlined the sewer service charges for fiscal year 2018/2019.

5. District Manager's Report

Comments:

1. **CIP Project:**
   a) Belle Haven III CIP construction to begin late July or early August.
   b) Oak Grove sewer rehabilitation: DM Scott will have staff inspect traffic plates to make sure of a smooth transition while driving.
2. **Affiliate Agency/Association News**:
   a) **County:** District Staff, District Counsel, County Staff and LAFCo are all reviewing a draft Lafco application, Resolutions and MOUs for transferring the Solid Waste Franchise to the County.
   b) **County Elections:** Candidate filing period is July 16-Aug. 10.
   c) **CASA:** Conference Aug. 7-10.
   d) **Save the Bay Nursey:** Project will start in August.

3. Upcoming Events:
   a) **Board meetings**: Goals Luncheon and John Simonetti's Retirement July 10th at noon. July 25th meeting cancelled. Bd Mtg August 8 and August 22.
   b) **Movie Night**: District is sponsoring the City of Menlo Park movie night on August 10th.
   c) **Block Party**: District will have a booth for the Block Party on August 16.

4) Misc./Action Items from Previous Meeting:

   a) **SSOs:** Zero SSOs for June. Total 3 = 2018
   b) **LAH & TOW:** Staff is working on Amendments to maintenance agreements with Towns of Woodside and Los Altos Hills.
   c) **Water Truck:** DM presented update with photos on water truck restoration.
   d) **Local 350:** A meeting is scheduled in Aug. re: Janus vs AFSCME

6. Consent Calendar

A. Approval of Minutes for Regular meeting June 27, 2018

B. Approval of the Withdrawal Order Authorizing Payment of Certain Bills and Salaries and Consideration of Other Financial Matters for July 11, 2018

C. WBSD Operations and Maintenance Report – June 2018

D. Town of Los Altos Hills Operations and Maintenance Report for Work Performed by WBSD – June 2018

E. Consideration of Resolution Authorizing President and Secretary of the District Board to Enter into Reimbursement Agreement Between the Chang Family and the West Bay Sanitary District

Motion by: Thiele-Sardiña 2nd by: Walker Vote: AYE: 4 NAY: 0 Abstain: 0

CONSIDERATION OF ITEM(S) REMOVED FROM THE CONSENT CALENDAR

Comments: None

7. Consider Adoption of Resolution Approving the Audited & Revised Sewer System Management Plan (SSMP) and Authorizing Re-Certification of Same for 2018

Motion by: Otte 2nd by: Walker Vote: AYE:4 NAY:0 Abstain: 0

Comments: DM Scott presented the highlights of the revised Sewer System Management Plan to the Board.

8. Consider Establishing a District Commuter Benefit Program

Motion by: Otte 2nd by: Thiele-Sardiña Vote: AYE:4 NAY:0 Abstain: 0

Comments: DM Scott presented to the Board various options to select. Board consensus was to approve commuter benefit program as described as a pilot program to expire June 30, 2019 and authorize the District Manager to implement the specified program and direct the District Manger to bring information and options to the Board at a future Board meeting regarding the use of electric bicycles. President pro tem Dehn stated that she believes the Menlo Park traffic problem is not solely related to Facebook and there are other factors. Staff report was modified accordingly.

9. Consider Adoption of Resolution to Approve Amendment #5 to the Agreement for Root Foaming Services with Duke's Root Control Inc., and Authorize the District Manager to Execute Said Amendment

Motion by: Otte 2nd by: Walker Vote: AYE:4 NAY:0 Abstain: 0

Comments: DM Scott reported that the contract price stays the same as previous years.

10. Discussion and Direction on Recycled Water Projects - Sharon Heights & Bayfront, Including Project Status

Comments: DM Scott reported there will be a meeting with the City of Menlo Park on July 17 to discuss the encroachment permit plan for the Sharon Heights project. Dave Richardson of Woodard Curran presented an update, results and options on the Bayfront Feasibility Study. He reported three alternatives have been identified for non-potable water. Alternative A (East Menlo Park Bayfront area) is the most cost effective and there is demand from Connect Menlo. Many potential customers in Alternatives B (Willow Road) and C (into Downtown Menlo Park area) use groundwater for irrigation. Alternative C has the lowest demand and longest pipe needed. Possible customers for the Connect Menlo area in Alternative A could include Cal Trans and Mid-Peninsula High School. The Board reviewed and commented on the update of the Bayfront Feasibility Study and compared all the alternatives. Board consensus was the best option is Alternative A and directed DM to move forward with the Bayfront Feasibility Study.

11. Report, Discussion & Direction on South Bayside Waste Management Authority (SBWMA)

Comments: President pro tem Dehn reported that there will be no July or August SBWMA meetings. At the last meeting the budget was approved, there was discussion on a tipping fee increase, and the modified household battery collection will relaunch on September 3 including significant public outreach. Amendment #1 to the re-stated franchise agreement is pending approval. DM Scott reported the District's re-stated franchise agreement is awaiting final signature pending suggested language changes. DM Scott reported the County of San Mateo has proposed an effective date for the District divestiture of its solid waste franchise for January 1, 2020. The Board gave direction to proceed with divestiture effective January 1, 2020.

12. Report & Discussion on Silicon Valley Clean Water (SVCW) and Discussion on SVCW CIP Program and Financing

Comments: Director Otte reported that on the CIP construction contracts and some minor change orders. The new SVCW Manager candidate Teresa Herrera will be considered at the July 11 meeting and the employment agreement will be considered on August 23.

13. Closed Session

A. CONFERENCE WITH LABOR NEGOTIATORS
Agency Designated Negotiators: Board President/District Counsel
Unrepresented Employee: District Manager
(Government Code §54957.6)

B. CONFERENCE WITH LEGAL COUNSEL – EXISTING LITIGATION
(Cal. Govt. Code §54956.9(d))
Name of Case: *1740 Oak Avenue, LP v. West Bay Sanitary District, et al.* – SMCSC Case No. 18CIV02183

Entered closed session at 9:24p.m. Left closed session at 9:45 p.m.

Reportable action: None

14. Consideration of Resolution Authorizing the President and Secretary of the District Board Enter into Employment Agreement Between the West Bay Sanitary District And Phil Scott (District Manager)

Motion by: Thiele-Sardiña 2nd by: Walker Vote: AYE: 4 NAY: 0 Abstain: 0

Comments: Director Thiele-Sardiña motioned to approve resolution and to amend section 4F of the employment agreement to delete the words “and commuting” from the caption.

15. Comments or Reports from Members of the District Board and Consider Items to be Placed on Future Agenda

Comments: None

16. Adjournment Time: The meeting was adjourned at 9:48 PM

THIS PAGE LEFT INTENTIONALLY BLANK

WEST BAY SANITARY DISTRICT
WITHDRAWAL ORDER
8/8/2018

CHECK	TO WHOM PAYABLE	PURPOSE	AMOUNT
63869	ANDERSON PACIFIC	CIP - SHGCC Recycled Water Facility	723,818.60
63870	BOBCAT OF FREMONT	Repairs & Maintenance - Coll	784.91
63871	ELITE PARTS LLC	Repairs & Maintenance - Coll	467.11
63872	THE ALMANAC	Printing & Publication - A&G	396.00
63873	GRAINGER	Operating Supplies - Coll	195.00
63874	HACH COMPANY	Repairs & Maintenance - Coll	1,628.39
63875	CITY OF MENLO PARK	Utilities - Coll	37.86
63876	CITY OF MENLO PARK-Fuel	Gas, Oil & Fuel - Coll	4,464.04
63877	OGASAWARA LANDSCAPE MAINT.	Contract Services - A&G	4,000.00
63878	PACIFIC GAS & ELECTRIC	Utilities - Coll	359.74
63879	PENINSULA BUILDING MATERIALS	Operating Supplies - Coll	83.63
63880	PONTON INDUSTRIES, INC.	Plant & Admin.	9,193.47
63881	ROBERTS & BRUNE CO	Operating Supplies - Coll	356.70
63882	SAN MATEO COUNTY	Other Operaing Expense - Coll	1,132.00
63883	COUNTY OF SAN MATEO	Training, Meeting & Travel - Coll	510.00
63884	SHARP BUSINESS SYSTEMS	Rents & Leases - Coll	308.29
63885	AQUALITY WATER MANAGEMENT INC.	Deposit - Facebook	7,210.00
63886	FINISHMASTER INC	CIP: Recycled Water Truck	677.73
63887	LOG ME IN	Repairs & Maintenance - Coll	64.72
63888	SMARTCOVER SYSTEMS, INC.	Contract Services/Repairs & Maint. - Coll	33,268.48
63889	SOLARWINDS	Repairs & Maintenance - Coll	55.00
63890	CSRMA c/o ALLIANT INSURANCE	Employee Benefits - A&G/Coll	121,353.00
63891	ALLIANT INSURANCE SERVICES	Prepaid Insurance	14,403.00
63892	CSRMA c/o ALLIANT INSURANCE	Prepaid Insurance	10,824.00
63893	ROBERT J. SCHEIDT	Meetings, Training & Travel - A&G	479.11
63894	HAZARD MANAGEMENT SERVICES	Meetings, Training & Travel - Coll	1,384.30
63895	SAN MATEO COUNTY CLERK	Deposits - 18 Redberry Ridge, PV	119.00
63896	SAN MATEO COUNTY CLERK	Deposits - 25 Kiowa Ct, PV (Lin)	110.00
63897	SAN MATEO COUNTY CLERK	Deposits - 135 Commonwealth Dr, MP	50.00
63898	SAN MATEO COUNTY CLERK	Deposits - Menlo Gateway Phase II - 105, 125, 135, 155 Const	50.00
63899	SAN MATEO COUNTY CLERK	Deposits - 234 Catalpa Dr, Ath (Halaby)	95.00
63900	BANKCARD CENTER	Mtgs, Training & Trav; Rep & Maint; Other Op Exp - A&G/Coll	2,301.59
63901	ANNETTE BERGERON - PETTY CASH	Other Operating Expense - A&G	20.00
63902	ANNETTE BERGERON - PETTY CASH	Other Operating Expense - Coll	163.08
63903	ATCHISON, BARISONE & CONDOTTI	Professional Services- A&G	16,568.94
63904	CALIFORNIA WATER SERVICE	Utilities - Coll	1,860.81
63905	CINTAS CORP	Contract Services - Coll	624.45
63906	DU-ALL SAFETY, LLC	Professional Services - Coll	3,881.25
63907	FINISHMASTER INC	Operating Supplies - Coll	1,075.54
63908	HF&H CONSULTANTS, LLC	Professional Services - A&G	2,233.63
63909	HOME DEPOT CREDIT SERVICES	Repairs & Maint - Coll	171.61
63910	LUCITY, INC.	Repairs & Maintenance - Coll	805.00
63911	CITY OF MENLO PARK	Repairs & Maint. - Coll	3,123.43
63912	RED WING SHOE STORE	Operating Supplies - Coll	250.00
63913	WEST YOST & ASSOCIATES	Professional Services - A&G	1,500.27
63914	CALPERS LONG-TERM CARE PROGRAM	LTC Withholding	26.61
63915	IEDA	Professional Services - A&G	734.00
63916	INVARION INC	Operating Supplies - Coll	1,395.00

63917	LOG ME IN	Repairs & Maintenance - Coll	1,599.99
63918	MEDCO SUPPLY COMPANY	Operating Supplies - Coll	161.98
63919	MAIL FINANCE	Remts & Leases - A&G	267.18
63920	SAN MATEO COUNTY EMPLOYEES	Credit Union WH	1,854.50
63921	NAVIA BENEFIT SOLUTIONS	FSA Deduction	150.00
63922	MARIE RAMIREZ/SDU	Wage Garnishment	508.62
63923	ALBERT PATINO	Other Operating Expense - Coll	117.55
63924	WEF MEMBERSHIP RENEWALS	Memberships - A&G	255.00
63925	CWEA	Memberships - Coll	1,039.00
63926	CWEA TCP	Memberships - Coll	543.00
63927	CWEA	Memberships - Coll	353.00
63928	SAN MATEO COUNTY CLERK	Deposits - 155 Cherokee Wy, PV (Harrosh)	113.00
63929	CSRMA c/o ALLIANT INSURANCE	Other Operating Expense - A&G	495.60
63930	AMERICAN WATER WORKS ASSN.	Memberships - A&G	269.00
63931-34	Tabacco/Schmidt Reimbursement Agreement	Reimbursement Agreement	60,301.99
63935	AT&T	Utilities - A&G	1,204.86
63936	ANDERSON PACIFIC	Recycled Water Facility - SHGCC	209,827.27
63937	READYREFRESH BY NESTLE	Utilities - A&G	187.13
63938	CINTAS CORP	Contract Services - Coll	1,456.82
63939	FEDERAL EXPRESS	Office Expense - A&G	514.50
63940	FREMONT URGENT CARE	Professional Services - A&G	82.00
63941	PACIFIC GAS & ELECTRIC	Utilities - Coll	770.80
63942	PREFERRED ALLIANCE	Professional Services - A&G	209.10
63943	RHINO NETWORKS	Repairs & Maintenance - Coll	858.00
63944	RMC WATER AND ENVIRONMENT	Recycled Water Facility - SHGCC	56,102.48
63945	STAPLES CREDIT PLAN	Office/Ink Supplies - A&G	538.79
63946	CALPERS LONG-TERM CARE PROGRAM	LTC Witholding	26.61
63947	CINTAS CORP	Contract Services - Coll	1,289.92
63948	COMCAST	Utilities - A&G	269.85
63949	G3 ENGINEERING, INC	Smart Covers	9,061.13
63950	HACH COMPANY	Operating Supplies - Coll	1,628.39
63951	INDUSTRIAL SAFETY SUPPLY	Operating Supplies - Coll	6,332.76
63952	CITY OF MENLO PARK	Utilities - Coll	72.87
63953	MORSE HYDRAULICS	Repairs & Maintenance - Coll	11.71
63954	OCCASIONS, ETC.	Training, Meetings & Travel - A&G	82.15
63955	OGASAWARA LANDSCAPE MAINT.	Contract Services - A&G	400.00
63956	PONTON INDUSTRIES, INC.	Operating Supplies - Coll	440.00
63957	SHARP BUSINESS SYSTEMS	Rents & Leases - Coll	270.33
63958	TOSHIBA FINANCIAL SERVICES	Rents & Leases - Coll	266.45
63959	UNDERGROUND SERVICE ALERT	Memberships - A&G	9,447.63
63960	WECO INDUSTRIES, INC.	Operating Supplies - Coll	4,835.03
63961	ZOOM IMAGING SOLUTIONS, INC.	Rents & Leases - Coll	12.38
		TOTAL CHECKS	1,348,842.66

WIRES

TRANSFER DATE	PURPOSE	
7/18/2018	Calpers unfunded liability lump sum payment for FY2018-19	$276,130.00
7/20/2018	Employee Payroll - Pay Period 07/5/2018 - 07/20/2018	$100,981.03
7/20/2018	Federal Payroll Taxes	$25,960.30
7/20/2018	State Payroll Taxes	$8,396.16
7/20/2018	ICMA	$5,864.69

7/25/2018	SVCW Bonds 2009	$648,507.85
7/25/2018	SVCW Bonds 2014	$407,135.08
7/25/2018	SVCW Bonds 2015	$547,175.00
7/25/2018	SVCW Bonds 2018	$1,177,061.56
7/31/2018	Directors Payroll for July	$1,980.00
8/1/2018	SVCW operations, capital & reserve contributions for Aug	$632,488.00
8/1/2018	Calpers medical for August	$41,420.73
8/6/2018	Prime Pay fees for July	$666.48
8/3/2018	Employee Payroll - Pay Period 07/20/2018 - 08/3/2018	$83,438.60
8/3/2018	Federal Payroll Taxes	$18,429.40
8/3/2018	State Payroll Taxes	$5,864.76
8/3/2018	ICMA	$5,878.69
	WIRE TRANSFERS FROM BofW CHECKING	3,987,378.33
7/17/2018	Transfer from BoW Recycled Water Cash Flow Reserve	955,000.00
7/17/2018	Transfer from LAIF	3,700,000.00
	TOTAL WIRE TRANSFERS TO BofW CHECKING	4,655,000.00

Secretary

President

WITHDRAWAL ORDER
SUPPLEMENTAL PURCHASE REGISTER
8/8/2018

OPERATING SUPPLIES & OFFICE EXPENSE

CHECK	AMOUNT	VENDOR	DESCRIPTION
63916	1,395.00	INVARION INC	Rapid Plan software for traffic control.
63951	6,332.76	INDUSTRIAL SAFETY SUPPLY	Calibration gas and replacement of 3 gas monitors.
63960	4,835.03	WECO INDUSTRIES, INC.	Oz III camera repair parts $1.9K; 12 couplers for sewer hose repair $2.9K.

MISCELLANEOUS

CHECK	AMOUNT	VENDOR	DESCRIPTION
63950	1,628.39	HACH COMPANY	Repair Flo Dar sensor.
63869	723,818.60	ANDERSON PACIFIC	Planning & design work during May for SHGCC Recycled Water Facility.
63874	1,628.39	HACH COMPANY	Flo Dar repair and calibration.
63876	4,464.04	CITY OF MENLO PARK-Fuel	District vehicle fuel for June.
63877	4,000.00	OGASAWARA LANDSCAPE MAINT.	Monthly grounds maintenance and miscellaneous landscape and spraying at FERRF.
63880	9,193.47	PONTON INDUSTRIES, INC.	Repair and calibrate flow meter sensor $2.5K; 2 conductivity meters & accessories $6.5K.
63885	7,210.00	AQUALITY WATER MANAGEMENT INC.	Consulting for Facebook blackwater system - funded from Facebook deposit.
63888	33,268.48	SMARTCOVER SYSTEMS, INC.	Annual contract services for service and maintenance of District Smart Cover manhole covers.
63890	121,353.00	CSRMA c/o ALLIANT INSURANCE	FY2018-19 annual workers compensation insurance premium.
63891	14,403.00	ALLIANT INSURANCE SERVICES	FY2018-19 insurance premium for District vehicles physical damage.
63892	10,824.00	CSRMA c/o ALLIANT INSURANCE	FY2018-19 insurance premium for District property.
63893	479.11	ROBERT J. SCHEIDT	Reimburse for Goals luncheon expenses.
63900	2,301.59	BANKCARD CENTER	Mtgs, Training & Trav $1.3K; Rep & Maint $0.6K; Other Op Exp $0.4K.
63901	20.00	ANNETTE BERGERON - PETTY CASH	Petty Cash replenishment for Regulatory Compliance.
63902	163.08	ANNETTE BERGERON - PETTY CASH	Petty Cash replenishment for Admin.
63903	16,568.94	ATCHISON, BARISONE & CONDOTTI	Professional services for June.
63906	3,881.25	DU-ALL SAFETY, LLC	Monthly safety maintenance contract plus extra training for asbestos & ergonomics.
63908	2,233.63	HF&H CONSULTANTS, LLC	Solid waste franchise divestiture consulting during
63911	3,123.43	CITY OF MENLO PARK	District vehicle maintenancel for June.
63913	1,500.27	WEST YOST & ASSOCIATES	Consulting for Facebook blackwater system - funded from Facebook deposit.
63917	1,599.99	LOG ME IN	Annual subscription for online remote meeting software.
63923	117.55	ALBERT PATINO	Reimburse for Cal State class: Pretreatment Facility Inspection.
63931-34	60,301.99	Tabacco/Schmidt Reimbursement Agreement	Connection #6 (120 Bear Gulch Dr, PV - Sampson)
63936	209,827.27	ANDERSON PACIFIC	Planning & design work during June for SHGCC Recycled Water Facility.
63944	56,102.48	RMC WATER AND ENVIRONMENT	Design/Build Phase B work for SHGCC during May - July 13.
63949	9,061.13	G3 ENGINEERING, INC	Purchase of 2 Smart Cover manhole covers.
63959	9,447.63	UNDERGROUND SERVICE ALERT	Annual fee for underground utility markings.

WEST BAY SANITARY DISTRICT

SUMMARY OF FY2017-18 PAYMENTS
(Through Withdrawal Order 08/8/2018)

	TOTAL BY VENDOR 7/1/2018- 8/8/2018	WITHDRAWAL 8/8/2018
REGULAR PAYABLES		
A-A Lock & Alarm	-	
A-1 Rhino Liner	-	
A & B Trailer Hitch Inc.	-	
A & D Automatic Gate Access	-	
AAA Rentals	-	
ABAG Hazmat	-	
ADS LLC	-	
Action Towing	-	
Matheson Tri-Gas, Inc.	42.80	
Alan Steel & Supply Co.	-	
Allen Equipment Company, Inc.	-	
All Fence Company, Inc.	-	
Alliant Insurance Services Inc	14,403.00	14,403.00
The Almanac	396.00	396.00
Alpha Analytical Laboratories	-	
Alpine Ladera Fuel Inc.	-	
American Industrial Pumps	-	
American Messaging	61.42	
American Textile & Supply		
American Water Services	-	
American Water Works Assn.	269.00	269.00
Andes Construction Inc.	-	
Anderson Pacific	933,645.87	933,645.87
Andrighetto RA	-	
A M Consulting	-	
Aquality Water Management Inc.	7,210.00	7,210.00
Arrowhead	-	
Ascent Elevator Services Inc.	-	
Association of Bay Area Gov.	-	
AT&T	1,204.86	1,204.86
Atchison, Barisone & Condotti	16,568.94	16,568.94
Town of Atherton	-	
AW Direct	451.68	
BHI Management Consulting	-	
Backflow Prevention Specialist	-	
Baggengineers	-	
Bayside Heating & Air	-	
Bankcard Center	2,301.59	2,301.59
S.G. Banks, Inc	-	
Barker Blue	-	
Bay Alarm	3,435.11	
Bay Area Air Quality	-	
Bay Area Barricade Service Inc	-	
Bay Area Clean Water Agencies	-	
Bay Area Paving Co. Inc.	-	
Bayside Equipment Company	-	
Bayside Fire Protection Inc.	-	
Bay Area Clean Water Agencies	-	
Bell Electrical Supply, Inc.	-	
Annette Bergeron - Petty Cash	183.08	183.08
Jed M. Beyer	50.00	
Blue Oaks Reimb Agrmnt Participants	-	
Bobcat West	784.91	784.91
Boyce Reimb Agreement Participants	-	
Boy Scout Troop 222	-	
Brothers Mail Order Ind Inc	-	
Bruce Barton Pump Service	-	
Buja, Mejia, Sausal Creek Assoc Reim Agrmnt	-	
Burke, Williams & Sorensen	-	
CA-NV AWWA	-	
CDPH-OCP	-	

WEST BAY SANITARY DISTRICT

SUMMARY OF FY2017-18 PAYMENTS
(Through Withdrawal Order 08/8/2018)

	TOTAL BY VENDOR 7/1/2018- 8/8/2018	WITHDRAWAL 8/8/2018
REGULAR PAYABLES		
CDW Government	-	
CWEA,Sfbs	-	
CWEA-SCVS	-	
CWEA-SAS	-	
CWEA-SFSB	-	
CWEA	1,584.00	1,392.00
CWEA TCP	543.00	543.00
CASA	-	
CSDA	-	
CSRMA C/O Alliant Insurance	132,672.00	132,672.00
CSR Graphics	-	
State of California	-	
Calif Special Districts Assn.	-	
California Commerce	-	
Calif. Labor Law Poster Servic	-	
California Trenchless Inc.	-	
Calif. Utilities Emergency Assc	-	
State Water Resources Control	-	
California Water Service	1,903.69	1,860.81
California Water Service Company	-	
Calpers Long-Term Care Program	79.83	53.22
Calpers Fiscal Services Div.	-	
Cal-Steam	-	
Caltrans	-	
Cardiac Science Corp.	-	
Center For Hearing Health Inc.	-	
Central Supply Co., Inc.	-	
Century Carpet, Inc.	-	
Chemsearch	-	
Chevron	46.57	
Chavan & Associates LLP	-	
Christian Brothers Lining, Co.	-	
Cintas Corp	5,687.92	3,371.19
Cintas Fas Lockbox 636525	-	
Comcast	539.70	269.85
Commercial Capital Company Llc	-	
Comtread Inc.	-	
CPS HR Consulting	-	
Corrosion Engineering Assoc.	-	
Heath Cortez	-	
Costco Membership	-	
County Specialty Gases	-	
Cues	-	
CUSI	-	
Custom Tops, Inc.	646.16	
DKF Solutions Group	-	
D & L Supply	-	
D & S Sales	-	
Davey Tree Expert Company	-	
The Definitive Deodorant Co.	-	
Dell Marketing L.P.	-	
Delta Diablo Sanitation Dist.	-	
Deluxe	-	
Dept. of Industrial Relations	-	
Dept of Motor Vehicles	-	
Detection Instruments	-	
Dewey Pest Control	-	
Direct Safety	-	
Dolphin Graphics	-	
Downtown Ford Sales	-	
Ducky's Car Wash	-	
Duke's Root Control, Inc	-	
Du-All Safety, Llc	3,881.25	3,881.25

WEST BAY SANITARY DISTRICT

SUMMARY OF FY2017-18 PAYMENTS
(Through Withdrawal Order 08/8/2018)

	TOTAL BY VENDOR 7/1/2018- 8/8/2018	WITHDRAWAL 8/8/2018
REGULAR PAYABLES		
ESRI	-	
Eagle United U.S.A., Inc.	-	
East Bay Muni Utility District	-	
City of East Palo Alto	-	
Eco Office	-	
Electro-Stock Inc	-	
Elite Parts LLC	467.11	467.11
Embarcadero Media	-	
Environmental Bio Int., Llc	-	
EnviroZyme	2,998.34	
Express Safety, Inc.	-	
Fanton Reimbursement Recipients	-	
Fastenal Company	-	
Fast Response On-Site Testing	-	
Federal Express	514.50	514.50
Fremont Urgent Care	82.00	82.00
Finishmaster Inc	1,770.30	1,753.27
City of Foster City	-	
Four Star Automotive, Inc.	-	
Freyer & Laureta	510.00	
Full Source, LLC	-	
G3 Engineering, Inc	9,061.13	9,061.13
GCVSC (Grtr Centrl Valley Coll Syst)	-	
Gaffigan Company	-	
Gardini Electric Co. Inc.	-	
Garratt Reimbursement Recipients	-	
Angus Gavin	-	
Gearbox	-	
General Hardware & Bldrs Suppl	-	
Getgo, Inc.	-	
Givat Partnership	-	
Golden Gate Truck	-	
Golden Oak Reimb Agrmnt Participants	-	
Golden Street Printing Co	-	
Goldstreet Design Agency, Inc.	-	
Grainger	195.00	195.00
Granite Rock, Inc.	-	
Guardian Life Insurance Co.	-	
HDPE Supply	-	
HF&H Consultants, Llc	6,019.88	2,233.63
H & R Plumbing & Drain	-	
Hach Company	3,256.78	3,256.78
Hagemeyer North America, Inc.	-	
Hadronex, Inc.	-	
Half Moon Bay Grading & Paving	-	
Harben California	-	
Harbor Ready Mix	-	
Harrington Industrial Plastics	-	
Hazard Management Services	1,384.30	1,384.30
Hassett Hardware	-	
Helix Laboratories, Inc.	-	
Arthur Hildebrand	150.00	
Hillyard/San Francisco	-	
Holmes International	-	
Home Depot Credit Services	171.61	171.61
Hot Stick U.S.A.	-	
Bob Hulsmann	-	
Hydraulic Controls	-	
Hyster Sales Company	-	
ICMA-Fees	-	
IEDA	734.00	734.00
IKEA Accounts Receivable	-	
Ikon Financial Services	-	

WEST BAY SANITARY DISTRICT

SUMMARY OF FY2017-18 PAYMENTS
(Through Withdrawal Order 08/8/2018)

	TOTAL BY VENDOR 7/1/2018- 8/8/2018	WITHDRAWAL 8/8/2018
REGULAR PAYABLES		
Ikon Office Solutions	-	
Industrial Safety Supply	6,332.76	6,332.76
Industrial Scientific	-	
Innovyze, Inc	-	
Instrument Technology Corp.	-	
International Tree Experts	-	
Interstate All Battery Center	-	
Interstate Traffic Control Pro	-	
Invarion Inc	1,395.00	1,395.00
Isac Inc	-	
J & B Corrosion Engineering	1,395.00	
Jack Doheny Companies, Inc.	-	
Jani-King of CA, Inc - SFR/OAK	614.92	
Bill Kitajima	-	
Kaman Industrial Technologies	-	
Kantor'S Furniture	-	
KDS Communications	-	
Richard Kinder	-	
KIS	-	
Kone Inc.	-	
Alex Kushner General Contr.	-	
L & M Transmission	-	
LDH MP, LLC	-	
LMC Truck	-	
LTW Reimb Agreement Participants	-	
Larson Consulting	-	
Lasky Trade Printing	-	
Las Lomitas Elementary School	-	
Legacy Painting Contractors	-	
Log Me In	1,664.71	1,664.71
Town of Los Altos Hills	-	
Lucity, Inc.	805.00	805.00
Lyngso Garden Materials, Inc	-	
MSDS Online, Inc.	-	
Damian Madrigal	-	
Eric Madrigal	-	
Mail Finance	267.18	267.18
The Marlin Company	-	
Marshall & Tidmarsh/Moulds RA	-	
Massimo Mazzon	-	
Masune	-	
Masters of Communication	-	
Maxx Metals	-	
McGuire & Hester	-	
Dale/McMills Partnership	-	
Mckenna Long & Aldridge	-	
Medco Supply Company	161.98	161.98
Metal Building Company	-	
Menlo Chevron	-	
Menlo Park Chamber of Commerce	-	
City of Menlo Park-Water	72.87	72.87
City of Menlo Park-Repair	3,123.43	3,123.43
City of Menlo Park-Fuel	4,464.04	4,464.04
City of Menlo Park	1,340.10	37.86
Menlo Park Police Department	-	
City of Menlo Park-Print Shop	-	
Menlo Park Fire Protection	-	
Menlo Park Hardware Co. #14016	-	
Metromedia, Inc.	-	
Myers Tire Supply	-	
Mid Peninsula Abstracts	-	
Midwest Unlimited	-	
Mike's Camera, Inc.	-	

WEST BAY SANITARY DISTRICT

SUMMARY OF FY2017-18 PAYMENTS
(Through Withdrawal Order 08/8/2018)

	TOTAL BY VENDOR 7/1/2018- 8/8/2018	WITHDRAWAL 8/8/2018
REGULAR PAYABLES		
Mills-Peninsula Health Service	-	
Mission Clay Products Llc	-	
Mission Valley Ford	-	
Monney Car Audio	-	
Katrina Montinola	-	
Edward P. Moritz	-	
Morse Hydraulics	11.71	11.71
Moss Rubber	-	
Motorola Solutions, Inc.	-	
Motion Industries, Inc.	-	
Municipal Maintenance Equip.	-	
NCCIPMA-HR	-	
National Fleet Solutions	-	
National Notary Association	-	
Nationwide Retirement Solution	-	
National Safety Council	-	
Navia Benefit Solutions	300.00	150.00
Neopost USA Inc.	-	
Carrie Nevoli - Petty Cash	-	
Nixon-Egli Equipment Company	-	
Norcal Materials, Inc.	-	
Nor-Cal Pipeline	-	
Norlab, Inc.	-	
North Bay Pensions	-	
No. CA. Emergency Vehicle Inst	-	
Northern Safety Co.	-	
Northern Tool & Equip Co.	-	
Northwestern Design	-	
Oldcastle Precast Inc.	-	
Office Of Water Programs	-	
Occassions	82.15	82.15
Ogasawara Landscape Maint.	4,400.00	4,400.00
Old Toledo Brands, Inc.	-	
Omega Industrial Supply, Inc.	-	
Opengov, Inc.	-	
Oratech Controls, Inc.	-	
Orenco Systems	-	
Orlandi Trailer	-	
William J. Ornellas	-	
Orr Safety	-	
George Otte	-	
Owen Equipment Company	-	
P&F Distributers	-	
PC Connection Sales Corp	-	
Pacific Auto Repair	-	
Pacific Gas & Electric	6,255.66	1,130.54
PAMF	-	
Pape Machinery	-	
Albert Patino	117.55	117.55
Patterson Medical Supply, Inc	-	
Pearpoint, Inc	-	
Peninsula Abstracts	-	
Peninsula Auto-RV Truck Service	-	
Peninsula Battery Inc.	-	
Peninsula Building Materials	83.63	83.63
Peninsula Corridor JPA	-	
Pacific Peninsula Group	-	
Peterson Trucks	-	
Phil Finer Refrigeration & A/C	-	
Piccolo Italiano Ristorante	-	
Pier 2 Marketing	-	
Pinnacle Products	-	
Pinpoint	-	

WEST BAY SANITARY DISTRICT

SUMMARY OF FY2017-18 PAYMENTS
(Through Withdrawal Order 08/8/2018)

	TOTAL BY VENDOR 7/1/2018- 8/8/2018	WITHDRAWAL 8/8/2018
REGULAR PAYABLES		
Pipelogix	-	
Pirtek Sfo	-	
Pitney Bowes, Inc.	-	
Pollard Water.Com	-	
Ponton Industries, Inc.	15,199.20	9,633.47
Precise Concrete Sawing, Inc.	-	
Precise Printing and Mailing	-	
Precision Engineering	-	
Precor Home Fitness	-	
Preferred Alliance	540.20	209.10
Principal Financial Group	4,477.42	
Priority 1 Public Safety	-	
Progressive Business	-	
PERS Public Agency Coalition	-	
Public Employees Retirement-Medical	83,936.06	$41,420.73
Public Employees Retirement	314,203.75	$276,130.00
Samuel Quezada	-	
Marie Ramirez/SDU	1,017.24	508.62
Sergio Ramirez	-	
R.A. Nosek Investigations	-	
R.E.P. Nut N Bolt Guy	-	
R.S. Hughes	-	
RMC Water and Environment	120,789.55	56,102.48
Radin Co.	-	
Rain Harvesting Supplies	-	
Ranger Pipelines	-	
RapidForms	-	
Readyrefresh By Nestle	187.13	187.13
Red Wing Shoe Store	250.00	250.00
Redwood General Tire Co., Inc.	-	
Reed & Graham, Inc.	-	
Todd Reese	-	
Re-Pipe California	-	
Restoration Management Co.	-	
Rhino Networks	858.00	858.00
Rich Voss Trucking	-	
Ricker Machinery Company	-	
Roberts & Brune Co	356.70	356.70
Roto Rooter	-	
Rubber Flooring Inc.	-	
Santified Plumbing & Rooter	-	
Silicon Valley Clean Water	1,264,976.00	$632,488.00
SVCW Bond - 2009 Bond	648,507.85	$648,507.85
SVCW Bond - 2014 Bond	407,135.08	$407,135.08
SVCW Bond - 2015 Bond	547,175.00	$547,175.00
SVCW Bond - 2018 Bond	1,177,061.56	$1,177,061.56
SVCW SRF Loan payment	-	
SBWMA	-	
SWRCB	-	
Safeguard Armor	-	
Safety Center Inc	-	
Safety-Kleen, Corp.	-	
Sage Software	-	
San Mateo County Employees	3,709.00	1,854.50
San Mateo County Assessor	-	
SM County-CSDA	-	
San Mateo County Clerk	635.00	537.00
San Mateo County Elections	-	
SM County Environmental Health	-	
SM County-Empl Services	-	
San Mateo Co Health Dept	-	
SM County Public Health	-	
San Mateo County	1,642.00	1,642.00

WEST BAY SANITARY DISTRICT

SUMMARY OF FY2017-18 PAYMENTS
(Through Withdrawal Order 08/8/2018)

	TOTAL BY VENDOR 7/1/2018- 8/8/2018	WITHDRAWAL 8/8/2018
REGULAR PAYABLES		
SM County Recorder	-	
San Mateo County Sheriffs Dept	-	
San Mateo County Tax Collector	-	
SM LAFCO	-	
Samtrans	-	
Rupert Sandoval	-	
Santa Clara Valley Water Dist.	-	
County of San Mateo Lafco	-	
Santa Clara County Clerk	-	
Santa Clara County Dept of Env. Health	-	
Santa Clara Valley - CWEA	-	
Henry Santos	-	
Scelzi Enterprises, Inc.	-	
Robert J. Scheidt	479.11	479.11
Schmidt/Tabacco RA	-	
Phil Scott	-	
John T. Seace, LS	-	
Secretary of State	-	
Seekzen Systems	475.00	
Sensera Systems	-	
Sequoia Automotive	-	
Shape Incorporated	17,789.33	
Siemens Industry, Inc.	-	
Simonds Machinery Co.	-	
Snap on Industrial C/O	-	
Sharp Business Systems	848.95	578.62
Sharp Electronics Corporation	-	
Shaw Pipeline Inc.	-	
Signa Mechanical	-	
John R. Simonetti	-	
SIM/TECH Filter	-	
Scott Sisto	-	
Smartcover Systems, Inc.	33,268.48	33,268.48
Snap on Industrial	-	
Softmart	-	
Solarwinds	55.00	55.00
Sonsray Machinery Llc	-	
South Bay Truck & Equip.	-	
Southwest Credit	-	
Southwest Construction & Prop	-	
Southwest Products Corp.	-	
Spartan Tool LLC	1,525.19	
Sreco Flexible	-	
Staples Credit Plan	1,753.24	538.79
State Board of Equalization	-	
State Water Resources Control	-	
Statewide Safety & Signs	-	
Sterngold Reimbursement Agreement Participants	-	
Stevens Creek Quarry, Inc.	-	
Sunnyvale Ford	-	
The Surtec System	213.61	
Sutter EAP	429.24	
Symantec Corporation	-	
System Pavers	-	
Tabacco/Schmidt Reimbursement Agreement	60,301.99	60,301.99
Tap Plastics Inc.	-	
Target Specialty Products	-	
Teamsters Local No. 350	880.00	
Teletrac Navman US LTD.	-	
Telog Instruments, Inc.	-	
Telstar Instruments, Inc.	-	
Terminix Processing Center	-	
Test America	-	

WEST BAY SANITARY DISTRICT

SUMMARY OF FY2017-18 PAYMENTS
(Through Withdrawal Order 08/8/2018)

	TOTAL BY VENDOR 7/1/2018- 8/8/2018		WITHDRAWAL 8/8/2018	
REGULAR PAYABLES				
The Concept Genie	-			
Roy Thiele-Sardina	-			
Thomson Reuters/Barclays	-			
3T Equipment Company	-			
Tools Direct USA	-			
Toshiba Financial Services	532.90		266.45	
Total Equipment	-			
Total Safety U.S., Inc.	-			
Towne Ford Sales	-			
TPC Trainco	-			
Tractor Equipment Sales	-			
Trailer Villa	-			
Transcom Corporation	-			
Trenchless Technology Inc.	-			
Turf & Industrial Equipment	-			
USB Memory Direct	-			
Underground Service Alert	9,447.63		9,447.63	
United Rentals	-			
US Bank	-			
U.S. BANK PARS ACCT	-			
US Concrete	-			
U.S. Healthworks Medical Group	-			
U.S. Jetting, LLC.	-			
V & A Consulting Engineers	-			
V.W. Housen & Associates	21,810.61			
Valley Heating & Cooling	-			
Valley Power Systems North	-			
Vanderlans & Sons, Inc.	-			
Verizon Wireless	1,600.18			
Vision Communications Co.	667.00			
Vortex Industries, Inc.	-			
David Walker	-			
Water Environment Federation	255.00		255.00	
Weco Industries, Inc.	4,835.03		4,835.03	
Donna M. Wies	7,400.00			
Jonathan Werness	232.81			
West Valley Ventures	-			
West Yost & Associates	1,500.27		1,500.27	
Western States Tool & Supply	-			
Whitley Burchett & Associates	-			
Winzer Corporation	-			
Young's Auto Supply Center	-			
Zanker Road Landfill	-			
Zoom Imaging Solutions, Inc.	388.03		12.38	
TOTAL REGULAR PAYABLES		5,947,752.33		5,078,760.28
SALARIES/WAGES & W/H				
Salaries/Wages - Net Pay	186,687.60		$184,419.63	
Directors Fees - Net Pay	4,800.86		$1,980.00	
PrimePay Fees	1,223.30		$666.48	
IRS - Federal Payroll Taxes	44,857.06		$44,389.70	
EDD - State Payroll Taxes	14,309.80		$14,260.92	
ICMA	17,615.87		$11,743.38	
TOTAL SALARIES RELATED		269,494.49		$257,460.11
TOTAL PAYABLES		6,217,246.82		5,336,220.39

WEST BAY SANITARY DISTRICT
Schedule of Cash Receipt Deposits
07/06/2018 - 8/1/18

DEPOSIT DATE	RECEIPT NUMBER	DESCRIPTION	AMOUNT
7/16/18	460168	Permit: 1840 White Oak Dr	$468.13
7/16/18	460169	V O I D	
7/16/18	460170	Permit: 1345 Bay Laurel Dr	$160.00
7/16/18	460171	Vendor Refund	$308.29
7/16/18	460172	Permit: 1109 Valparaiso Ave	$160.00
7/16/18	460173	Permit: 2051 Sterling Avenue, MP	$128.68
7/16/18	460174	Permit: 1020 Windsor Dr	$270.00
7/16/18	460175	Permit: 83 Linda Vista Ave	$934.60
7/16/18	460176	Permit: 17 Shasta Ln	$160.00
7/16/18	460177	Permit: 900 Menlo Oaks Dr	$270.00
7/16/18	460178	Invoice 2017/18-082 SSO cleanup caused by Express Plumbing	$10,268.62
7/16/18	460179	Permit: 1150 Pine St	$270.00
7/16/18	460180	Inv. 2018/19-001 SVCW Flow Equal usage for FY2018/19	$337,632.61
7/16/18	460181	Reinspection Fee: 2 Leon Way	$80.00
7/16/18	460182	Permit: 210 W Floresta Way, PV	$405.00
7/19/18	460183	Invoice 2017/18-081 - Station 1300 disposal of dirt at FERRF	$116,270.00
7/19/18	460184	Permit: 135 Commonwealth Dr	$430.00
8/1/18	460185	Permit: 43 Santiago Ave	$270.00
8/1/18	460186	Permit 96 Lane Place, Atherton	$410.60
8/1/18	460187	Permit: 1834 Doris Dr	$270.00
8/1/18	460188	Vendor Refund	$114.30
8/1/18	460189	Permit: 193 Willow Rd	$270.00
8/1/18	460190	Permit: 2575 Sandhill Rd, MP	$355.77
8/1/18	460191	Inv 2017/18-083A maintenance for Los Altos Hills during May	$15,417.03
8/1/18	460192	Permit: 10 Cotton Pl	$160.00
8/1/18	460193	Permit: 1010 Alma St	$270.00
8/1/18	460194	155 Lake Road - Los Trancos Woods Reimbursement Fees	$72,399.43
8/1/18	460195	167 Lake Road - Los Trancos Woods Reimbursement Fees	$72,399.43
8/1/18	460196	167/155 Lake Road Fees	1,624.40
8/1/18	460197	Vendor Refund	35.00
8/1/18	460198	Vendor Refund	860.63
8/1/18	460199	Vendor Refund	603.24
8/1/18	460200	Permit: 920 Olive St	270.00
8/1/18	460201	Discharge Permit: 55 Deodora Dr, Ath	421.60
8/1/18	460202	Permit: 55 Deodora Dr	160.00
8/1/18	460203	Class 3 Permit: 193 Willow Road, MP	2,545.00
8/1/18	460204	Permit: 550 El Camino Real	160.00
8/1/18	460205	Permit: 550 El Camino Real	160.00
8/1/18	460206	Permit: 550 El Camino Real	160.00
8/1/18	460207	Permit: 550 El Camino Real	160.00
8/1/18	460208	Permit: 550 El Camino Real	160.00
8/1/18	460209	Permit: 1 Toyon Rd	270.00
8/1/18	460210	Permit: 1249 Jervis Ave	180.00
		Total Deposits	638,322.36

Wire Transfers to BoW Checking

7/17/18		Recology franchise fee	7,759.88

THIS PAGE LEFT INTENTIONALLY BLANK

WEST BAY
Sanitary District

WEST BAY SANITARY DISTRICT
AGENDA ITEM 4C

To: ***Board of Directors***

From: ***Phil Scott, District Manager***
Liz Bahrami, District Accountant

Subject: ***Consider to Ratify and Approve Report on District's Investment Portfolio Including the Transactions of Assets Described Therein as of 06/30/18***

Background

On October 27, 2010 the District named Bank of the West as the District's Investment advisor and approved to invest $5 million in available funds according to the model portfolio.

At the October 15, 2014 Board meeting the Directors discussed the District's reserve funds and directed the DM to use recent unbudgeted connection fee revenues to fund District reserves as close to the predetermined target levels as the revenues would allow. As a result, the DM transferred $3M from the Money Market account on October 29, 2014 to the Investment Management Fund.

At the November 19, 2014 Board meeting the Directors discussed the District's reserves and further directed the DM to apply another set of unbudgeted connection fees to the reserves in an attempt to move even closer to the reserve target levels. In addition, since BOW had recently notified the District that the Money Market interest rate would be failing to match the LAIF (Local Agency Investment Fund) rate, the Board directed the DM to move the Operating Reserves to the Investment Management Fund. The District's Operating Fund – equivalent to 5 months operating expense – is designed to bridge the cash flow gap between tax roll receipts from the County from July to December of each year. The Board consensus was to fully fund the reserves at target levels. The Operating Reserves change each year as the budget changes and the target level was set as budgeted for the end of FY16-17. During March an additional reserve was established to set aside funds received from Sharon Heights Golf and Country Club for the required Recycled Water SRF Reserve.

The District's reserve funds were set as follows:

District Reserves	Target Balance	Mkt Value Balance	YTD Transf To LAIF
Emergency Capital Reserve	= $5.0M	=$5.31M	
Capital Project Reserve	= $3.5M	=$3.64M	
Recycled Water Cash Flow	= $8.0M	=$3.90M	($4,215,149)
Operating Reserves (5 mo's Op Exp)	= $7.9M	=$7.93M	
Rate Stabilization Reserve	= $3.0M	=$5.58M	
Recycled Water SRF Reserve (SHGCC)	= $806.2K	=$810.2K	

Total Reserves market value at 6/30/2018 ≈ $27.17M

Analysis

The District Accountant has attached a copy of the latest monthly Investment Management Account showing income activity and market valuations as of the end of the month for the six Reserve accounts. Since January through the end of June, maturing investments totaling $4,215,149 as shown above, were withdrawn and deposited into LAIF to provide needed capital to fund the near term cash flow needs of the Recycled Water Facility project and still maintain interest earnings on these funds while waiting disbursement. During June the average annual yield for funds deposited into LAIF was 1.85%.

Fiscal Impact

The investment portfolios have been set up with the goal to yield a rate of return of approximately 2%. Based on year to date performance as measured by the month end market values, the yields have been trending under budget with an approximate annualized yield of 0.3% collectively. However, since the investments within each reserve are intended to be held to the maturity, the returns over time are anticipated to yield gains closer to the investment goals.

Recommendation

The District Manager recommends the District Board ratify and approve the report on the District's Investment Portfolio including the transactions of assets described therein as of 06/30/18.

Attachments: Investment Management Account Reports and YTD Summary as of June 30, 2018; LAIF Performance Report for June 2018; PARS Account Statement as of 6/30/2018.

BANK OF THE WEST
BNP PARIBAS
WEALTH MANAGEMENT

WBSD EMERGENCY CAPITAL RESERVE

Account Number: [redacted]
Statement Period: 06/01/18 - 06/30/18

WEST BAY SANITARY DISTRICT
ATTN: PHILLIP L. SCOTT
500 LAUREL STREET
MENLO PARK CA 94025

Received
JUL 13 2018
West Bay Sanitary District

Fiduciary
Chuen Ying Lee
(408) 645-3234
Portfolio
Michael D. Smith
(408) 490-2079

Asset Allocation

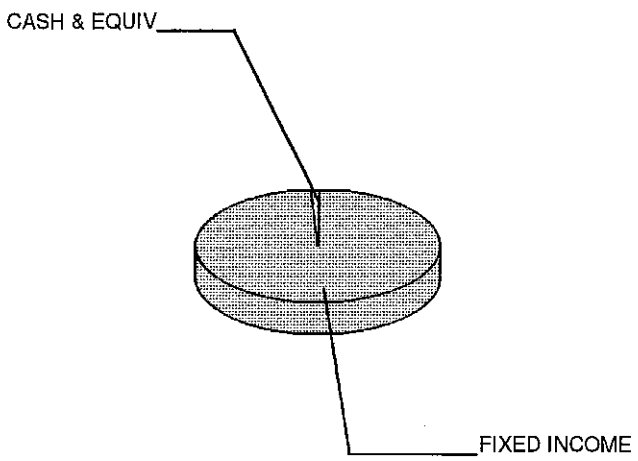

Asset Valuation

Description	Market Value	% of Account
Cash & Equiv	65,433.80	1.2%
Fixed Income	5,220,028.14	98.8%
Total Portfolio	**$ 5,285,461.94**	**100.0%**
Accrued Income	29,159.69	
Total Valuation	**$ 5,314,621.63**	

Market Reconcilement

	Current Period	Year To Date
Beginning Market Value	**$ 5,313,525.33**	**$ 5,250,691.70**
Income		
Interest	11,429.50	222,484.28
Purchased Income	-488.53	-5,308.19
Disbursements	-789.51	-393,816.38
Cash Transfers	0.00	380,000.00
Realized Gains/(Losses)	0.00	-13,893.36
Change In Accrued Income	373.45	967.50
Change In Market Appreciation/(Depreciation)	-5,263.38	-63,820.40
Non-Cash Asset Changes	-4,165.23	-62,683.52
Ending Market Value	**$ 5,314,621.63**	**$ 5,314,621.63**

WBSD EMERGENCY CAPITAL RESERVE

Account Number: [redacted]
Statement Period: 06/01/18 - 06/30/18

Asset Position As of 06/30/18

Asset Description	Units	Market Value Cost	Est. Annual Income Accruals	Current Yield
Cash Equivalents				
Bank of The West Advantage Acct	65,433.800	65,433.80 65,433.80	1,145.00 325.40	1.75%
Total Cash Equivalents		**$ 65,433.80** **$ 65,433.80**	**1,145.00** **325.40**	**1.75%**
Fixed Income				
Astrazeneca PLC Sr Nt 1.95% Dtd 09/18/2012 Due 09/18/2019 Callable	100,000.000	98,963.00 98,290.00	1,950.00 557.91	1.97%
Blackrock Inc Nt 5.00% Dtd 12/10/2009 Due 12/10/2019 Callable	250,000.000	257,882.50 260,697.50	12,500.00 729.16	4.85%
Citigroup Inc Fr 2.50% Dtd 07/29/2014 Due 07/29/2019 Non-Callable	250,000.000	248,877.50 250,422.50	6,250.00 2,638.88	2.51%
Federal Home Ln Mtg Corp Partn Gold Group #G13107 5.500% Dtd 03/01/2008 Due 07/01/2020 IPD14	9,836.480	9,915.96 13,850.32	541.00 45.08	5.46%
Federal Home Ln Mtg Corp Partn Gold Group #G11940 5.500% Dtd 03/01/2006 Due 05/01/2020 IPD14	13,834.580	13,979.70 18,153.28	760.00 63.40	5.44%
Federal Home Loan Bks Cons Bds Step Cpn Dtd 04/27/2017 Due 04/27/2022 Callable	120,000.000	119,997.60 119,730.00	2,760.00 480.16	2.30%
Federal Home Loan Bks Cons Bds 3.06% Dtd 06/28/2018 Due 06/28/2022 Callable	80,000.000	80,048.00 80,000.00	2,448.00 20.40	3.06%
Federal Home Loan Bks Cons Bds 3.15% Dtd 05/02/2018 Due 05/02/2023 Callable	50,000.000	49,853.00 49,912.50	1,575.00 258.12	3.16%
Federal Home Loan Bks Cons Bds 1.70% Dtd 07/27/2016 Due 07/27/2022 Callable	140,000.000	133,047.60 133,575.40	2,380.00 1,018.11	1.79%
Federal Farm Cr Bks Cons Systemwide Bds 1.90% Dtd 08/03/2017 Due 08/03/2022 Non-Callable	80,000.000	77,364.00 80,188.80	1,520.00 624.88	1.96%

2000063 002749 0778

[redacted] EMERGENCY CAPITAL RESERVE

Account Number: [redacted]
Statement Period: 06/01/18 - 06/30/18

Asset Position As of 06/30/18

Asset Description	Units	Market Value Cost	Est. Annual Income Accruals	Current Yield
Federal Farm Cr Bks Cons Systemwide Bds 2.83% Dtd 04/18/2018 Due 04/18/2022 Callable	100,000.000	99,754.00 100,000.00	2,830.00 573.86	2.84%
Federal Farm Cr Bks Cons Systemwide Bds 2.81% Dtd 06/14/2018 Due 06/14/2021 Callable	150,000.000	149,838.00 150,000.00	4,215.00 199.04	2.81%
Federal Home Loan Bks Cons Bds 4.125% Dtd 11/13/2009 Due 12/13/2019 Non-Callable	50,000.000	51,147.50 51,958.50	2,062.00 103.12	4.03%
Federal Home Loan Bks Cons Bds 2.875% Dtd 08/27/2010 Due 09/11/2020 Non-Callable	80,000.000	80,408.00 82,794.40	2,300.00 702.77	2.86%
Federal Home Ln Mtg Corp 1.75% Dtd 12/30/2016 Due 12/30/2020 Callable	160,000.000	156,112.00 160,000.00	2,800.00 1,407.77	1.79%
Federal Home Ln Mtg Corp Medium Term Nts 1.625% Dtd 04/27/2017 Due 07/27/2020 Callable	40,000.000	39,236.00 40,000.00	650.00 115.55	1.66%
Federal Home Ln Mtg Corp 1.65% Dtd 04/27/2017 Due 04/27/2020 Callable	150,000.000	147,261.00 147,377.63	2,475.00 440.00	1.68%
Federal Home Ln Mtg Corp 2.00% Dtd 04/26/2017 Due 10/26/2021 Callable	120,000.000	116,486.40 120,000.00	2,400.00 433.33	2.06%
Federal Home Ln Mtg Corp 2.00% Dtd 10/12/2017 Due 10/12/2021 Callable	100,000.000	97,483.00 100,000.00	2,000.00 438.88	2.05%
Federal Home Ln Mtg Corp 1.65% Dtd 10/30/2017 Due 10/30/2019 Callable	80,000.000	79,068.00 80,000.00	1,320.00 223.66	1.67%
Federal Home Ln Mtg Corp 2.25% Dtd 12/29/2017 Due 12/29/2021 Callable	60,000.000	58,852.80 60,000.00	1,350.00 7.50	2.29%
Federal Natl Mtg Assn 1.50% Dtd 04/27/2015 Due 06/22/2020 Non-Callable	25,000.000	24,498.00 25,211.00	375.00 9.37	1.53%
Federal Natl Mtg Assn 1.50% Dtd 10/19/2015 Due 11/30/2020 Non-Callable	25,000.000	24,340.25 25,186.50	375.00 32.29	1.54%

WBSD - EMERGENCY CAPITAL RESERVE

Account Number: [redacted]
Statement Period: 06/01/18 - 06/30/18

Asset Position As of 06/30/18

Asset Description	Units	Market Value Cost	Est. Annual Income Accruals	Current Yield
Federal Natl Mtg Assn 1.875% Dtd 11/16/2015 Due 12/28/2020 Non-Callable	40,000.000	39,276.00 40,631.20	750.00 6.25	1.91%
Federal Natl Mtg Assn 1.375% Dtd 02/05/2016 Due 02/26/2021 Non-Callable	60,000.000	58,081.80 59,545.70	825.00 286.45	1.42%
Federal Natl Mtg Assn 1.25% Dtd 09/30/2016 Due 09/30/2019 Callable	60,000.000	59,137.80 59,985.00	750.00 189.58	1.27%
Federal Natl Mtg Assn 1.375% Dtd 10/07/2016 Due 10/07/2021 Non-Callable	60,000.000	57,540.60 59,344.00	825.00 192.50	1.43%
Federal Natl Mtg Assn 2.00% Dtd 01/09/2017 Due 01/05/2022 Non-Callable	60,000.000	58,511.40 60,280.80	1,200.00 586.66	2.05%
Federal Natl Mtg Assn 1.80% Dtd 11/30/2016 Due 05/26/2021 Callable	100,000.000	97,119.00 100,000.00	1,800.00 175.00	1.85%
Federal Natl Mtg Assn 1.75% Dtd 09/28/2017 Due 09/28/2020 Callable	130,000.000	127,566.40 130,000.00	2,275.00 587.70	1.78%
Federal Natl Mtg Assn 2.70% Dtd 03/26/2018 Due 03/26/2021 Callable	140,000.000	139,874.00 140,000.00	3,780.00 997.50	2.70%
Federal Home Ln Mtg Corp 2.375% Dtd 01/13/2012 Due 01/13/2022 Non-Callable	60,000.000	59,212.20 61,337.40	1,425.00 664.99	2.41%
Federal Home Ln Mtg Corp 1.75% Dtd 04/16/2012 Due 05/30/2019 Non-Callable	25,000.000	24,860.75 25,211.50	437.00 37.67	1.76%
Federal Home Ln Mtg Corp 1.25% Dtd 10/02/2012 Due 10/02/2019 Non-Callable	25,000.000	24,620.25 25,097.25	312.00 77.25	1.27%
Federal Natl Mtg Assn Gtd Passthru CTF Pool #386765 5.420% Dtd 01/01/2004 Due 01/01/2019 IPD24	45,755.890	45,941.66 50,599.64	2,479.00 206.66	5.40%
Federal Natl Mtg Assn Gtd Passthru CTF Pool #470344 2.740% Dtd 02/01/2012 Due 01/01/2019 IPD24	117,575.920	117,470.10 122,455.21	3,221.00 268.46	2.74%

2000063 002750 0778

[redacted]RGENCY CAPITAL RESERVE

Account Number: [redacted]
Statement Period: 06/01/18 - 06/30/18

Asset Position As of 06/30/18

Asset Description	Units	Market Value Cost	Est. Annual Income Accruals	Current Yield
Federal Home Ln Mtg Corp Multiclass Mtg Partn Ctfs Gtd Ser 2958 Cl Qj 4.00% Dtd 04/01/2005 Due 04/15/2020 IPD14	18,724.120	18,730.56 22,697.29	748.00 62.41	4.00%
Federal Natl Mtg Assn Gtd REMIC Passthru Tr REMIC Tr Ser 2009 M1 Cl A2 4.287% Dtd 10/01/2009 Due 07/25/2019 IPD24	66,167.190	66,493.28 73,282.35	2,836.00 236.38	4.27%
Federal Natl Mtg Assn Gtd Passthru CTF Pool #797828 5.000% Dtd 04/01/2005 Due 04/01/2020 IPD24	26,458.810	26,913.11 32,021.31	1,322.00 110.24	4.92%
Federal Natl Mtg Assn Gtd Passthru CTF Pool #819257 5.000% Dtd 05/01/2005 Due 04/01/2020 IPD24	7,490.860	7,497.45 9,776.57	374.00 31.21	5.00%
Federal Natl Mtg Assn Gtd Passthru CTF Pool #MA0125 4.500% Dtd 06/01/2009 Due 07/01/2019 IPD24	1,243.430	1,252.51 3,564.76	55.00 4.66	4.47%
Fifth Third Bancorp Sr Nt 2.30% Dtd 02/28/2014 Due 03/01/2019 Callable	250,000.000	249,110.00 250,480.00	5,750.00 1,916.66	2.31%
Florida St Brd Admin Fin Corp Rev Bds 2016a Taxable 2.163% Dtd 03/08/2016 Due 07/01/2019 Callable	55,000.000	54,659.55 55,718.85	1,189.00 594.82	2.18%
Home Depot Inc Sr Glbl Nt 2.00% Dtd 02/12/2016 Due 04/01/2021 Callable	60,000.000	58,548.00 59,878.80	1,200.00 299.99	2.05%
Lloyds Bank PLC Sr Glbl Nt 2.35% Dtd 09/05/2014 Due 09/05/2019 Non-Callable	250,000.000	247,792.50 250,450.00	5,875.00 1,893.05	2.37%
Mattel Inc Sr Glbl Nt 2.35% Dtd 05/06/2014 Due 05/06/2019 Callable	250,000.000	249,707.50 250,000.00	5,875.00 897.56	2.35%
Morgan Stanley D W Disc Srmtns Sr Nt Flt Var Rate Dtd 11/30/2010 Due 11/30/2019 Non-Callable	50,000.000	50,187.50 49,062.50	1,909.00 599.21	3.80%
Ohio St Dev Assistance GO Bds 2009b Taxable 6.52% Dtd 06/18/2009 Due 10/01/2028 Prerefunded 10/01/2019 @ 100.000 Callable	45,000.000	47,100.60 47,587.95	2,934.00 733.50	6.23%

WBSD - EMERGENCY CAPITAL RESERVE

Account Number: [redacted]
Statement Period: 06/01/18 - 06/30/18

Asset Position As of 06/30/18

Asset Description	Units	Market Value Cost	Est. Annual Income Accruals	Current Yield
Pfizer Inc Sr Nt 5.20% Dtd 08/12/2015 Due 08/12/2020 Non-Callable	100,000.000	104,867.00 107,874.00	5,200.00 2,007.77	4.96%
Small Business Admin Gtd Ln Pool Ctfs 6.30% Dtd 05/12/1999 Due 05/01/2019	1,810.730	1,819.55 5,552.44	114.00 60.91	6.27%
Small Business Admin Gtd Ln Pool Ctfs 7.19% Dtd 12/15/1999 Due 12/01/2019	3,829.750	3,889.84 16,353.72	275.00 113.80	7.08%
Small Business Admin Gtd Ln Pool Ctfs 7.59% Dtd 01/12/2000 Due 01/01/2020	6,438.410	6,571.88 11,786.30	488.00 294.37	7.44%
Small Business Admin Gtd Ln Pool Ctfs 4.34% Dtd 03/17/2004 Due 03/01/2024	15,678.780	15,952.37 22,147.74	680.00 258.11	4.27%
Small Business Admin Gtd Ln Pool Ctfs 5.71% Dtd 06/13/2007 Due 06/01/2027	7,002.670	7,307.92 11,389.66	399.00 32.88	5.47%
Small Business Admin Gtd Ln Pool Ctfs 3.31% Dtd 05/13/2009 Due 05/01/2019	2,399.110	2,411.25 2,925.64	79.00 24.27	3.29%
Small Business Admin Gtd Ln Pool Ctfs #508468 Prime -0.175 Adj Quarterly Dtd 06/01/2008 Due 04/25/2020	6,864.000	6,876.77 8,982.21	211.00 2.94	3.07%
Small Business Admin Gtd Ln Pool Ctfs 4.084% Dtd 03/29/2011 Due 03/10/2021	12,264.490	12,464.28 13,797.53	500.00 188.44	4.02%
Starbucks Corp Sr Glbl 2.10% Dtd 02/04/2016 Due 02/04/2021 Callable	60,000.000	58,282.80 59,984.40	1,260.00 514.50	2.16%
Suntrust Bks Inc Sr Glbl 2.50% Dtd 05/01/2014 Due 05/01/2019 Callable	35,000.000	34,924.05 35,053.20	875.00 145.83	2.51%
3M Co Fr 2.00% Dtd 06/26/2012 Due 06/26/2022 Non-Callable	100,000.000	96,063.00 98,933.76	2,000.00 27.77	2.08%

WBSD - EMERGENCY CAPITAL RESERVE

Account Number: [redacted]
Statement Period: 06/01/18 - 06/30/18

Asset Position As of 06/30/18

Asset Description	Units	Market Value Cost	Est. Annual Income Accruals	Current Yield
Toronto Dominion Bank Fr 2.25% Dtd 11/05/2014 Due 11/05/2019 Non-Callable	250,000.000	248,065.00 250,940.00	5,625.00 875.00	2.27%
US Treasury Note 1.50% Dtd 05/31/2014 Due 05/31/2019	60,000.000	59,553.60 59,827.77	900.00 76.22	1.51%
US Treasury Note 1.625% Dtd 03/15/2017 Due 03/15/2020	110,000.000	108,383.00 109,355.18	1,787.00 524.59	1.65%
Western Un Co Cr Sen Sr Glbl 3.35% Dtd 11/22/2013 Due 05/22/2019 Callable	250,000.000	250,977.50 251,512.50	8,375.00 907.29	3.34%
Total Fixed Income		**$ 5,220,028.14** **$ 5,352,772.46**	**136,750.00** **28,834.29**	**2.62%**
Cash				
Principal Cash		0.00 0.00	0.00	0.00%
Income Cash		0.00 0.00	0.00	0.00%
Total Cash		**$ 0.00** **$ 0.00**	**0.00** **0.00**	**0.00%**
Total Market Value		**$ 5,285,461.94** **$ 5,418,206.26**	**137,895.00** **29,159.69**	**2.61%**
Total Market Value Plus Accruals		**$ 5,314,621.63**		

Income Activity

	Date	Income Cash	Principal Cash
Interest Income			
Bank of The West Advantage Acct Int To 05/31/18	06/01/18		367.77
Blackrock Inc Nt 5.00% Dtd 12/10/2009 Due 12/10/2019 Callable Int To 06/10/18 on 250,000	06/11/18		6,250.00

WBSD - EMERGENCY CAPITAL RESERVE

Account Number: [redacted]
Statement Period: 06/01/18 - 06/30/18

Income Activity

	Date	Income Cash	Principal Cash
Federal Home Ln Mtg Corp Partn Gold Group #G13107 5.500% Dtd 03/01/2008 Due 07/01/2020 IPD14 Int For May 2018 on 10924.61	06/15/18		50.07
Federal Home Ln Mtg Corp Partn Gold Group #G11940 5.500% Dtd 03/01/2006 Due 05/01/2020 IPD14 Int For May 2018 on 15199.30	06/15/18		69.66
Federal Home Loan Bks Cons Bds 4.125% Dtd 11/13/2009 Due 12/13/2019 Non-Callable Int To 06/13/18 on 50,000	06/13/18		1,031.25
Federal Home Ln Mtg Corp 2.25% Dtd 12/29/2017 Due 12/29/2021 Callable Int 12/29/17 To 06/29/18 on 60000	06/29/18		675.00
Federal Natl Mtg Assn 1.50% Dtd 04/27/2015 Due 06/22/2020 Non-Callable Int To 06/22/18 on 25,000	06/22/18		187.50
Federal Natl Mtg Assn 1.875% Dtd 11/16/2015 Due 12/28/2020 Non-Callable Int To 06/28/18 on 40,000	06/28/18		375.00
Federal Natl Mtg Assn Gtd Passthru CTF Pool #386765 5.420% Dtd 01/01/2004 Due 01/01/2019 IPD24 Int For May 2018 on 45903.32	06/25/18		207.33
Federal Natl Mtg Assn Gtd Passthru CTF Pool #470344 2.740% Dtd 02/01/2012 Due 01/01/2019 IPD24 Int For May 2018 on 117784.03	06/25/18		277.90
Federal Home Ln Mtg Corp Multiclass Mtg Partn Ctfs Gtd Ser 2958 Cl Qj 4.00% Dtd 04/01/2005 Due 04/15/2020 IPD14 Int To 06/01/18 on 25845.18	06/15/18		86.15
Federal Natl Mtg Assn Gtd REMIC Passthru Tr REMIC Tr Ser 2009 M1 Cl A2 4.287% Dtd 10/01/2009 Due 07/25/2019 IPD24 Int To 06/01/18 on 66279.43	06/25/18		236.78

W[redacted]ERGENCY CAPITAL RESERVE

Account Number: [redacted]
Statement Period: 06/01/18 - 06/30/18

Income Activity

	Date	Income Cash	Principal Cash
Federal Natl Mtg Assn Gtd Passthru CTF Pool #797828 5.000% Dtd 04/01/2005 Due 04/01/2020 IPD24 Int For May 2018 on 28903.36	06/25/18		120.43
Federal Natl Mtg Assn Gtd Passthru CTF Pool #819257 5.000% Dtd 05/01/2005 Due 04/01/2020 IPD24 Int For May 2018 on 7829.96	06/25/18		32.62
Federal Natl Mtg Assn Gtd Passthru CTF Pool #MA0125 4.500% Dtd 06/01/2009 Due 07/01/2019 IPD24 Int For May 2018 on 1393.32	06/25/18		5.22
Small Business Admin Gtd Ln Pool Ctfs 7.19% Dtd 12/15/1999 Due 12/01/2019 Int To 06/01/18 on 5335.87	06/01/18		191.83
Small Business Admin Gtd Ln Pool Ctfs 5.71% Dtd 06/13/2007 Due 06/01/2027 Int To 06/01/18 on 8070.19	06/01/18		230.40
Small Business Admin Gtd Ln Pool Ctfs #508468 Prime -0.175 Adj Quarterly Dtd 06/01/2008 Due 04/25/2020 Int To 05/01/18 on 9072.17	06/25/18		34.59
3M Co Fr 2.00% Dtd 06/26/2012 Due 06/26/2022 Non-Callable Int To 06/26/18 on 100,000	06/26/18		1,000.00
Total Interest Income		**$ 0.00**	**$ 11,429.50**
Purchased Income			
Federal Home Loan Bks Cons Bds 3.15% Dtd 05/02/2018 Due 05/02/2023 Callable Accrued Int To 06/14/18 Paid on Purchase of 50,000	06/14/18		-183.75
Federal Home Ln Mtg Corp 1.65% Dtd 04/27/2017 Due 04/27/2020 Callable Accrued Int To 06/06/18 Paid on Purchase of 150,000	06/06/18		-268.13

WBSD - EMERGENCY CAPITAL RESERVE

Account Number: [redacted]
Statement Period: 06/01/18 - 06/30/18

Income Activity

	Date	Income Cash	Principal Cash
US Treasury Note 1.625% Dtd 03/15/2017 Due 03/15/2020 Accrued Int To 06/06/18 Paid on Purchase of 10,000	06/06/18		-36.65
Total Purchased Income		**$ 0.00**	**$ -488.53**
Total Income		**$ 0.00**	**$ 10,940.97**

Disbursement Activity

	Date	Income Cash	Principal Cash
Fees/Expenses			
Monthly Fee To 05/31/18	06/15/18		-789.51
Total Fees/Expenses		**$ 0.00**	**$ -789.51**
Total Disbursements		**$ 0.00**	**$ -789.51**

Purchase Activity

	Date	Income Cash	Principal Cash
Bank of The West Advantage Acct Purchases (8) 06/01/18 To 06/30/18	06/30/18		-28,811.54
Federal Home Loan Bks Cons Bds 3.06% Dtd 06/28/2018 Due 06/28/2022 Callable Purchased 80000 06/07/18 From D A Davidson & Co @ 100	06/28/18		-80,000.00
Federal Home Loan Bks Cons Bds 3.15% Dtd 05/02/2018 Due 05/02/2023 Callable Purchased 50000 06/13/18 From Wedbush Morgan Secs @ 99.825	06/14/18		-49,912.50
Federal Farm Cr Bks Cons Systemwide Bds 2.81% Dtd 06/14/2018 Due 06/14/2021 Callable Purchased 150000 06/05/18 From D A Davidson & Co @ 100	06/14/18		-150,000.00

2000063 002753 0778

[redacted]ERGENCY CAPITAL RESERVE

Account Number: [redacted]
Statement Period: 06/01/18 - 06/30/18

Purchase Activity

	Date	Income Cash	Principal Cash
Federal Home Ln Mtg Corp 1.65% Dtd 04/27/2017 Due 04/27/2020 Callable Purchased 150000 06/05/18 From Tmc Bonds LLC @ 98.1879	06/06/18		-147,281.84
US Treasury Note 1.625% Dtd 03/15/2017 Due 03/15/2020 Purchased 10000 06/05/18 From Wells Fargo Securities, LLC @ 98.53125	06/06/18		-9,853.13
Total Purchases		**$ 0.00**	**$ -465,859.01**

Sale Activity

	Date	Proceeds	Realized Gain/Loss
Bank of The West Advantage Acct Sales (4) 06/01/18 To 06/30/18	06/30/18	437,950.51	
Federal Home Ln Mtg Corp Partn Gold Group #G13107 5.500% Dtd 03/01/2008 Due 07/01/2020 IPD14 Prin Pmt For May 2018	06/15/18	1,088.13	
Federal Home Ln Mtg Corp Partn Gold Group #G11940 5.500% Dtd 03/01/2006 Due 05/01/2020 IPD14 Prin Pmt For May 2018	06/15/18	1,364.72	
Federal Natl Mtg Assn Gtd Passthru CTF Pool #386765 5.420% Dtd 01/01/2004 Due 01/01/2019 IPD24 Prin Pmt For May 2018	06/25/18	147.43	
Federal Natl Mtg Assn Gtd Passthru CTF Pool #470344 2.740% Dtd 02/01/2012 Due 01/01/2019 IPD24 Prin Pmt For May 2018	06/25/18	208.11	
Federal Home Ln Mtg Corp Multiclass Mtg Partn Ctfs Gtd Ser 2958 Cl Qj 4.00% Dtd 04/01/2005 Due 04/15/2020 IPD14 Prin Pmt For 06/01/18	06/15/18	7,121.06	

WBSD EMERGENCY CAPITAL RESERVE

Account Number: [redacted]
Statement Period: 06/01/18 - 06/30/18

Sale Activity

	Date	Proceeds	Realized Gain/Loss
Federal Natl Mtg Assn Gtd REMIC Passthru Tr REMIC Tr Ser 2009 M1 Cl A2 4.287% Dtd 10/01/2009 Due 07/25/2019 IPD24 Prin Pmt For 06/01/18	06/25/18	112.24	
Federal Natl Mtg Assn Gtd Passthru CTF Pool #797828 5.000% Dtd 04/01/2005 Due 04/01/2020 IPD24 Prin Pmt For May 2018	06/25/18	2,444.55	
Federal Natl Mtg Assn Gtd Passthru CTF Pool #819257 5.000% Dtd 05/01/2005 Due 04/01/2020 IPD24 Prin Pmt For May 2018	06/25/18	339.10	
Federal Natl Mtg Assn Gtd Passthru CTF Pool #MA0125 4.500% Dtd 06/01/2009 Due 07/01/2019 IPD24 Prin Pmt For May 2018	06/25/18	149.89	
Small Business Admin Gtd Ln Pool Ctfs 7.19% Dtd 12/15/1999 Due 12/01/2019 Prin Pmt For 06/01/18	06/01/18	1,506.12	
Small Business Admin Gtd Ln Pool Ctfs 5.71% Dtd 06/13/2007 Due 06/01/2027 Prin Pmt For 06/01/18	06/01/18	1,067.52	
Small Business Admin Gtd Ln Pool Ctfs #508468 Prime -0.175 Adj Quarterly Dtd 06/01/2008 Due 04/25/2020 Prin Pmt For 05/01/18	06/25/18	2,208.17	
Total Sales		**$ 455,707.55**	**$ 0.00**

Non-Cash Activity

	Date	Cost
Blackrock Inc Nt 5.00% Dtd 12/10/2009 Due 12/10/2019 Callable Amortization of Premium	06/08/18	-3,495.00

WBSD - EMERGENCY CAPITAL RESERVE

Account Number: [redacted]
Statement Period: 06/01/18 - 06/30/18

Non-Cash Activity

	Date	Cost
Federal Home Loan Bks Cons Bds 4.125% Dtd 11/13/2009 Due 12/13/2019 Non-Callable Amortization of Premium	06/13/18	-643.00
Federal Home Ln Mtg Corp 1.65% Dtd 04/27/2017 Due 04/27/2020 Callable Accretion of Discount	06/29/18	95.79
Federal Natl Mtg Assn 1.50% Dtd 04/27/2015 Due 06/22/2020 Non-Callable Amortization of Premium	06/22/18	-52.25
Federal Natl Mtg Assn 1.875% Dtd 11/16/2015 Due 12/28/2020 Non-Callable Amortization of Premium	06/28/18	-124.00
Federal Natl Mtg Assn 1.375% Dtd 02/05/2016 Due 02/26/2021 Non-Callable Accretion of Discount	06/29/18	14.25
Federal Natl Mtg Assn 1.375% Dtd 10/07/2016 Due 10/07/2021 Non-Callable Accretion of Discount	06/29/18	16.71
3M Co Fr 2.00% Dtd 06/26/2012 Due 06/26/2022 Non-Callable Accretion of Discount	06/29/18	22.27
Total Non-Cash Transactions		**$ -4,165.23**

SECURITY PRICES CONTAINED IN THIS STATEMENT ARE OBTAINED FROM THE MOST RELIABLE SOURCES AVAILABLE BUT ARE NOT GUARANTEED BY BANK OF THE WEST. QUOTED PRICES MAY NOT EQUAL ACTUAL PRICES BECAUSE OF SECURITY SIZE, MARKET PRICE, TERM AND DEMAND.

BANK OF THE WEST
BNP PARIBAS
WEALTH MANAGEMENT

Electronic Funds Transfers

Preauthorized Transfers:
You may request an electronic fund transfer (EFT), such as an ACH transfer from or deposit to your account, by contacting your account Administrator. You may also preauthorize periodic EFTs by contacting your account Administrator. If you would like to know whether a preauthorized EFT has occurred, please contact your account Administrator at the phone number listed on the first page of your statement, or call 1-877-232-7321 (TTY 866-827-6167) between the hours of 8:00 A.M. to 5:00 P.M. Pacific Standard Time.

Error Resolution Notice:
If you think a statement or receipt is wrong or if you need more information about an EFT listed on a statement or receipt, telephone us at 1-877-232-7321 (TTY 866-827-6167) between the hours of 8:00 A.M. to 5:00 P.M. Pacific Standard Time, write to us at Bank of the West, 13300 Crossroads Parkway North, City of Industry, CA 91746, or e-mail us at WMGGIFSOperations@bankofthewest.com as soon as possible. We must hear from you no later than 60 days after we sent the FIRST statement on which the problem or error appeared.

1. Tell us your name and account number (if any).
2. Tell us the dollar amount of the suspected error.
3. Describe the error or the transfer you are unsure about, and explain as clearly as you can why you believe it is an error or why you need more information.

If you contact us verbally, we may require that you send us your complaint or question in writing within 10 business days. We will investigate your complaint and will correct any error promptly. If we take more than 10 business days to do this, we will credit your account for the amount you think is in error, so that you will have the use of the money during the time it takes us to complete our investigation.

BANK OF THE WEST
BNP PARIBAS
WEALTH MANAGEMENT

WEST BAY CAPITAL PROJECT RESERVE

Account Number: [redacted]
Statement Period: 06/01/18 - 06/30/18

WEST BAY SANITARY DISTRICT
ATTN: PHILLIP L. SCOTT
500 LAUREL STREET
MENLO PARK CA 94025

Received
JUL 13 2018

West Bay Sanitary District

Fiduciary
Chuen Ying Lee
(408) 645-3234
Portfolio
Michael D. Smith
(408) 490-2079

Asset Allocation

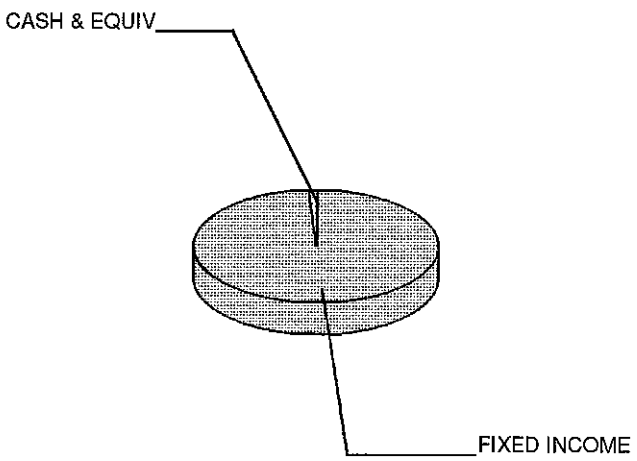

Asset Valuation

Description	Market Value	% of Account
Cash & Equiv	51,809.84	1.4%
Fixed Income	3,567,728.49	98.6%
Total Portfolio	**$ 3,619,538.33**	**100.0%**
Accrued Income	18,911.97	
Total Valuation	**$ 3,638,450.30**	

Market Reconcilement

	Current Period	Year To Date
Beginning Market Value	**$ 3,636,823.95**	**$ 3,607,544.30**
Income		
Interest	8,466.12	151,729.27
Purchased Income	-848.68	-3,123.37
Disbursements	-540.48	-389,436.45
Cash Transfers	0.00	380,000.00
Realized Gains/(Losses)	-506.89	-23,752.08
Change In Accrued Income	-135.82	227.94
Change In Market Appreciation/(Depreciation)	-2,149.72	-34,389.99
Non-Cash Asset Changes	-2,658.18	-50,349.32
Ending Market Value	**$ 3,638,450.30**	**$ 3,638,450.30**

WBSD - CAPITAL PROJECT RESERVE

Account Number: [redacted]
Statement Period: 06/01/18 - 06/30/18

Asset Position As of 06/30/18

Asset Description	Units	Market Value Cost	Est. Annual Income Accruals	Current Yield
Cash Equivalents				
Bank of The West Advantage Acct	51,809.840	51,809.84 51,809.84	906.00 432.22	1.75%
Total Cash Equivalents		**$ 51,809.84** **$ 51,809.84**	**906.00** **432.22**	**1.75%**
Fixed Income				
Federal Home Loan Bks Cons Bds Step Cpn Dtd 04/27/2017 Due 04/27/2022 Callable	50,000.000	49,999.00 49,887.50	1,150.00 200.06	2.30%
Federal Home Loan Bks Cons Bds 2.28% Dtd 10/26/2017 Due 10/26/2022 Callable	80,000.000	78,030.40 79,680.00	1,824.00 329.33	2.34%
Federal Home Loan Bks Cons Bds 3.06% Dtd 06/28/2018 Due 06/28/2022 Callable	100,000.000	100,060.00 100,000.00	3,060.00 25.50	3.06%
Federal Home Loan Bks Cons Bds 3.15% Dtd 05/02/2018 Due 05/02/2023 Callable	100,000.000	99,706.00 99,825.00	3,150.00 516.25	3.16%
Federal Home Loan Bks Cons Bds 2.375% Dtd 12/30/2013 Due 12/13/2019 Non-Callable	50,000.000	49,911.50 50,926.00	1,187.00 59.37	2.38%
Federal Home Loan Bks Cons Bds 1.625% Dtd 09/30/2016 Due 09/30/2021 Callable	100,000.000	96,126.00 96,151.00	1,625.00 410.76	1.69%
Federal Farm Cr Bks Cons Systemwide Bds 1.95% Dtd 09/17/2013 Due 09/17/2018 Non-Callable	100,000.000	100,006.00 100,482.00	1,950.00 563.33	1.95%
Federal Farm Cr Bks Cons Systemwide Bds 2.10% Dtd 10/04/2017 Due 04/04/2022 Callable	110,000.000	107,037.70 110,000.00	2,310.00 558.25	2.16%
Federal Farm Cr Bks Cons Systemwide Bds 2.03% Dtd 04/19/2017 Due 07/19/2021 Callable	60,000.000	58,456.20 60,000.00	1,218.00 548.09	2.08%
Federal Farm Cr Bks Cons Systemwide Bds 1.90% Dtd 07/19/2017 Due 07/19/2022 Non-Callable	60,000.000	58,048.80 60,258.00	1,140.00 513.00	1.96%

2000063 002757 0778

[redacted]PITAL PROJECT RESERVE

Account Number: [redacted]
Statement Period: 06/01/18 - 06/30/18

Asset Position As of 06/30/18

Asset Description	Units	Market Value Cost	Est. Annual Income Accruals	Current Yield
Federal Farm Cr Bks Cons Systemwide Bds 1.90% Dtd 08/03/2017 Due 08/03/2022 Non-Callable	60,000.000	58,023.00 60,141.60	1,140.00 468.66	1.96%
Federal Farm Cr Bks Cons Systemwide Bds 2.81% Dtd 06/14/2018 Due 06/14/2021 Callable	100,000.000	99,892.00 100,000.00	2,810.00 132.69	2.81%
Federal Farm Cr Bks Cons Systemwide Bds 3.09% Dtd 06/20/2018 Due 06/20/2022 Callable	100,000.000	99,880.00 99,925.00	3,090.00 94.41	3.09%
Federal Home Loan Bks Cons Bds 4.625% Dtd 05/25/2005 Due 06/12/2020 Non-Callable	50,000.000	51,910.50 53,012.00	2,312.00 122.04	4.45%
Federal Home Loan Bks Cons Bds 4.50% Dtd 08/12/2009 Due 09/13/2019 Non-Callable	100,000.000	102,417.00 104,952.00	4,500.00 1,350.00	4.39%
Federal Home Loan Bks Cons Bds 4.125% Dtd 11/13/2009 Due 12/13/2019 Non-Callable	100,000.000	102,295.00 103,917.00	4,125.00 206.24	4.03%
Federal Farm Cr Bks Cons Systemwide Bds 4.75% Dtd 09/21/2005 Due 09/21/2020 Non-Callable	125,000.000	130,696.25 135,287.50	5,937.00 1,649.30	4.54%
Federal Home Loan Bks Cons Bds 2.875% Dtd 08/27/2010 Due 09/11/2020 Non-Callable	100,000.000	100,510.00 103,493.00	2,875.00 878.47	2.86%
Federal Home Loan Bks Cons Bds 1.33% Dtd 06/07/2012 Due 09/20/2018 Non-Callable	100,000.000	99,860.00 100,159.00	1,330.00 373.13	1.33%
Federal Home Ln Mtg Corp 1.50% Dtd 09/30/2016 Due 03/30/2021 Callable	50,000.000	48,287.50 50,000.00	750.00 189.58	1.55%
Federal Home Ln Mtg Corp 1.75% Dtd 12/30/2016 Due 12/30/2020 Callable	180,000.000	175,626.00 180,000.00	3,150.00 1,583.75	1.79%
Federal Home Ln Mtg Corp 2.10% Dtd 09/29/2017 Due 09/29/2022 Callable	50,000.000	48,463.50 49,875.00	1,050.00 268.33	2.17%
Federal Home Ln Mtg Corp 1.65% Dtd 04/27/2017 Due 04/27/2020 Callable	100,000.000	98,174.00 98,251.76	1,650.00 293.33	1.68%

WBSD - CAPITAL PROJECT RESERVE

Account Number: [redacted]
Statement Period: 06/01/18 - 06/30/18

Asset Position As of 06/30/18

Asset Description	Units	Market Value Cost	Est. Annual Income Accruals	Current Yield
Federal Home Ln Mtg Corp 2.25% Dtd 12/29/2017 Due 12/29/2021 Callable	80,000.000	78,470.40 80,000.00	1,800.00 10.00	2.29%
Federal Home Ln Mtg Corp 3.00% Dtd 03/15/2018 Due 03/15/2023 Callable	40,000.000	39,887.60 39,960.00	1,200.00 353.32	3.01%
Federal Natl Mtg Assn 1.50% Dtd 04/27/2015 Due 06/22/2020 Non-Callable	40,000.000	39,196.80 40,337.60	600.00 15.00	1.53%
Federal Natl Mtg Assn 1.50% Dtd 10/19/2015 Due 11/30/2020 Non-Callable	40,000.000	38,944.40 40,298.40	600.00 51.66	1.54%
Federal Natl Mtg Assn 1.875% Dtd 11/16/2015 Due 12/28/2020 Non-Callable	100,000.000	98,190.00 101,578.00	1,875.00 15.62	1.91%
Federal Natl Mtg Assn 1.375% Dtd 02/05/2016 Due 02/26/2021 Non-Callable	60,000.000	58,081.80 59,545.70	825.00 286.45	1.42%
Federal Natl Mtg Assn 1.375% Dtd 10/07/2016 Due 10/07/2021 Non-Callable	60,000.000	57,540.60 59,344.00	825.00 192.50	1.43%
Federal Natl Mtg Assn 2.00% Dtd 01/09/2017 Due 01/05/2022 Non-Callable	120,000.000	117,022.80 120,561.60	2,400.00 1,173.33	2.05%
Federal Natl Mtg Assn 1.875% Dtd 04/10/2017 Due 04/05/2022 Non-Callable	60,000.000	58,200.60 60,200.40	1,125.00 268.75	1.93%
Federal Natl Mtg Assn 1.55% Dtd 08/28/2012 Due 08/28/2019 Callable	100,000.000	99,004.00 100,555.00	1,550.00 529.58	1.57%
Federal Natl Mtg Assn 1.80% Dtd 11/30/2016 Due 05/26/2021 Callable	120,000.000	116,542.80 120,000.00	2,160.00 210.00	1.85%
Federal Home Ln Mtg Corp 2.375% Dtd 01/13/2012 Due 01/13/2022 Non-Callable	120,000.000	118,424.40 122,674.80	2,850.00 1,330.00	2.41%
Federal Natl Mtg Assn Gtd Passthru CTF Pool #386765 5.420% Dtd 01/01/2004 Due 01/01/2019 IPD24	121,020.760	121,512.10 132,744.65	6,559.00 546.61	5.40%

W[redacted]PITAL PROJECT RESERVE

Account Number: [redacted]
Statement Period: 06/01/18 - 06/30/18

Asset Position As of 06/30/18

Asset Description	Units	Market Value Cost	Est. Annual Income Accruals	Current Yield
Federal Natl Mtg Assn Gtd Passthru CTF Pool #470344 2.740% Dtd 02/01/2012 Due 01/01/2019 IPD24	222,940.070	222,739.42 231,718.32	6,108.00 509.04	2.74%
Federal Natl Mtg Assn Gtd REMIC Passthru Tr REMIC Tr Ser 2009 M1 Cl A2 4.287% Dtd 10/01/2009 Due 07/25/2019 IPD24	38,651.310	38,841.79 41,405.24	1,656.00 138.08	4.27%
Federal Natl Mtg Assn Gtd Passthru CTF Pool #797828 5.000% Dtd 04/01/2005 Due 04/01/2020 IPD24	13,229.400	13,456.55 13,965.28	661.00 55.12	4.92%
Small Business Admin Gtd Ln Pool Ctfs 6.00% Dtd 09/16/1998 Due 09/01/2018 Callable	1,797.870	1,802.78 2,477.44	107.00 45.44	5.98%
Small Business Admin Gtd Ln Pool Ctfs #508468 Prime -0.175 Adj Quarterly Dtd 06/01/2008 Due 04/25/2020	27,456.130	27,507.20 28,640.17	844.00 11.74	3.07%
Sumitomo Mitsui Banking Corp Sr Bd 2.50% Dtd 07/19/2013 Due 07/19/2018 Non-Callable	90,000.000	90,000.90 90,737.10	2,250.00 1,012.50	2.50%
US Treasury Note 1.625% Dtd 03/15/2017 Due 03/15/2020	60,000.000	59,118.00 59,701.23	975.00 286.14	1.65%
Whatcom Cnty Wash Pub Util Dis LTD GO Ref Bds Taxable 2.10% Dtd 06/05/2012 Due 12/01/2018 Non-Callable	60,000.000	59,827.20 60,029.40	1,260.00 105.00	2.11%
Total Fixed Income		**$ 3,567,728.49** **$ 3,652,697.69**	**91,563.00** **18,479.75**	**2.57%**
Cash				
Principal Cash		0.00 0.00	0.00	0.00%
Income Cash		0.00 0.00	0.00	0.00%
Total Cash		**$ 0.00** **$ 0.00**	**0.00** **0.00**	**0.00%**

[redacted]ITAL PROJECT RESERVE

Account Number: [redacted]
Statement Period: 06/01/18 - 06/30/18

Asset Position As of 06/30/18

Asset Description	Units	Market Value Cost	Est. Annual Income Accruals	Current Yield
Total Market Value		$ 3,619,538.33 $ 3,704,507.53	92,469.00 18,911.97	2.55%
Total Market Value Plus Accruals		$ 3,638,450.30		

Income Activity

	Date	Income Cash	Principal Cash
Interest Income			
Bank of The West Advantage Acct Int To 05/31/18	06/01/18		473.92
Federal Home Loan Bks Cons Bds 2.375% Dtd 12/30/2013 Due 12/13/2019 Non-Callable Int To 06/13/18 on 50,000	06/13/18		593.75
Federal Home Loan Bks Cons Bds 4.625% Dtd 05/25/2005 Due 06/12/2020 Non-Callable Int To 06/12/18 on 50,000	06/12/18		1,156.25
Federal Home Loan Bks Cons Bds 4.125% Dtd 11/13/2009 Due 12/13/2019 Non-Callable Int To 06/13/18 on 100,000	06/13/18		2,062.50
Federal Home Ln Mtg Corp 2.25% Dtd 12/29/2017 Due 12/29/2021 Callable Int 12/29/17 To 06/29/18 on 80000	06/29/18		900.00
Federal Natl Mtg Assn 1.50% Dtd 04/27/2015 Due 06/22/2020 Non-Callable Int To 06/22/18 on 40,000	06/22/18		300.00
Federal Natl Mtg Assn 1.875% Dtd 11/16/2015 Due 12/28/2020 Non-Callable Int To 06/28/18 on 100,000	06/28/18		937.50
Federal Natl Mtg Assn Gtd Passthru CTF Pool #386765 5.420% Dtd 01/01/2004 Due 01/01/2019 IPD24 Int For May 2018 on 121410.70	06/25/18		548.37

2000063 002759 0778

WPSD - CAPITAL PROJECT RESERVE

Account Number: [redacted]
Statement Period: 06/01/18 - 06/30/18

Income Activity

	Date	Income Cash	Principal Cash
Federal Natl Mtg Assn Gtd Passthru CTF Pool #470344 2.740% Dtd 02/01/2012 Due 01/01/2019 IPD24 Int For May 2018 on 223334.68	06/25/18		526.95
Federal Natl Mtg Assn Gtd REMIC Passthru Tr REMIC Tr Ser 2009 M1 Cl A2 4.287% Dtd 10/01/2009 Due 07/25/2019 IPD24 Int To 06/01/18 on 38716.88	06/25/18		138.32
Federal Natl Mtg Assn Gtd Passthru CTF Pool #797828 5.000% Dtd 04/01/2005 Due 04/01/2020 IPD24 Int For May 2018 on 14451.67	06/25/18		60.22
Small Business Admin Gtd Ln Pool Ctfs #508468 Prime -0.175 Adj Quarterly Dtd 06/01/2008 Due 04/25/2020 Int To 05/01/18 on 36288.83	06/25/18		138.34
Whatcom Cnty Wash Pub Util Dis LTD GO Ref Bds Taxable 2.10% Dtd 06/05/2012 Due 12/01/2018 Non-Callable Int To 06/01/18 on 60,000	06/01/18		630.00
Total Interest Income		**$ 0.00**	**$ 8,466.12**
Purchased Income			
Federal Home Loan Bks Cons Bds 3.15% Dtd 05/02/2018 Due 05/02/2023 Callable Accrued Int To 06/14/18 Paid on Purchase of 100,000	06/14/18		-367.50
Federal Home Loan Bks Cons Bds 1.625% Dtd 09/30/2016 Due 09/30/2021 Callable Accrued Int To 06/07/18 Paid on Purchase of 100,000	06/07/18		-302.43

WBSD - CAPITAL PROJECT RESERVE

Account Number: [redacted]
Statement Period: 06/01/18 - 06/30/18

Income Activity

	Date	Income Cash	Principal Cash
Federal Home Ln Mtg Corp 1.65% Dtd 04/27/2017 Due 04/27/2020 Callable Accrued Int To 06/06/18 Paid on Purchase of 100,000	06/06/18		-178.75
Total Purchased Income		**$ 0.00**	**$ -848.68**
Total Income		**$ 0.00**	**$ 7,617.44**

Disbursement Activity

	Date	Income Cash	Principal Cash
Fees/Expenses			
Monthly Fee To 05/31/18	06/15/18		-540.48
Total Fees/Expenses		**$ 0.00**	**$ -540.48**
Total Disbursements		**$ 0.00**	**$ -540.48**

Purchase Activity

	Date	Income Cash	Principal Cash
Bank of The West Advantage Acct Purchases (6) 06/01/18 To 06/30/18	06/30/18		-18,433.71
Federal Home Loan Bks Cons Bds 3.06% Dtd 06/28/2018 Due 06/28/2022 Callable Purchased 100000 06/07/18 From D A Davidson & Co @ 100	06/28/18		-100,000.00
Federal Home Loan Bks Cons Bds 3.15% Dtd 05/02/2018 Due 05/02/2023 Callable Purchased 100000 06/13/18 From Wedbush Morgan Secs @ 99.825	06/14/18		-99,825.00
Federal Home Loan Bks Cons Bds 1.625% Dtd 09/30/2016 Due 09/30/2021 Callable Purchased 100000 06/06/18 From Piper & Jaffray & Co @ 96.151	06/07/18		-96,151.00

[redacted] CAPITAL PROJECT RESERVE

Account Number: [redacted]
Statement Period: 06/01/18 - 06/30/18

Purchase Activity

	Date	Income Cash	Principal Cash
Federal Farm Cr Bks Cons Systemwide Bds 2.81% Dtd 06/14/2018 Due 06/14/2021 Callable Purchased 100000 06/05/18 From D A Davidson & Co @ 100	06/14/18		-100,000.00
Federal Farm Cr Bks Cons Systemwide Bds 3.09% Dtd 06/20/2018 Due 06/20/2022 Callable Purchased 100000 06/13/18 From D A Davidson & Co @ 99.925	06/20/18		-99,925.00
Federal Home Ln Mtg Corp 1.65% Dtd 04/27/2017 Due 04/27/2020 Callable Purchased 100000 06/05/18 From Tmc Bonds LLC @ 98.1879	06/06/18		-98,187.90
Total Purchases		**$ 0.00**	**$ -612,522.61**

Sale Activity

	Date	Proceeds	Realized Gain/Loss
Bank of The West Advantage Acct Sales (6) 06/01/18 To 06/30/18	06/30/18	594,540.56	
Federal Natl Mtg Assn Gtd Passthru CTF Pool #386765 5.420% Dtd 01/01/2004 Due 01/01/2019 IPD24 Prin Pmt For May 2018	06/25/18	389.94	-37.78
Federal Natl Mtg Assn Gtd Passthru CTF Pool #470344 2.740% Dtd 02/01/2012 Due 01/01/2019 IPD24 Prin Pmt For May 2018	06/25/18	394.61	-15.54
Federal Natl Mtg Assn Gtd REMIC Passthru Tr REMIC Tr Ser 2009 M1 Cl A2 4.287% Dtd 10/01/2009 Due 07/25/2019 IPD24 Prin Pmt For 06/01/18	06/25/18	65.57	-4.67
Federal Natl Mtg Assn Gtd Passthru CTF Pool #797828 5.000% Dtd 04/01/2005 Due 04/01/2020 IPD24 Prin Pmt For May 2018	06/25/18	1,222.27	-67.99

WBSD - CAPITAL PROJECT RESERVE

Account Number: [redacted]
Statement Period: 06/01/18 - 06/30/18

Sale Activity

	Date	Proceeds	Realized Gain/Loss
Small Business Admin Gtd Ln Pool Ctfs #508468 Prime -0.175 Adj Quarterly Dtd 06/01/2008 Due 04/25/2020 Prin Pmt For 05/01/18	06/25/18	8,832.70	-380.91
Total Sales		**$ 605,445.65**	**$ -506.89**

Non-Cash Activity

	Date	Cost
Federal Home Loan Bks Cons Bds 2.375% Dtd 12/30/2013 Due 12/13/2019 Non-Callable Amortization of Premium	06/13/18	-305.50
Federal Home Loan Bks Cons Bds 4.625% Dtd 05/25/2005 Due 06/12/2020 Non-Callable Amortization of Premium	06/12/18	-738.50
Federal Home Loan Bks Cons Bds 4.125% Dtd 11/13/2009 Due 12/13/2019 Non-Callable Amortization of Premium	06/13/18	-1,286.00
Federal Home Ln Mtg Corp 1.65% Dtd 04/27/2017 Due 04/27/2020 Callable Accretion of Discount	06/29/18	63.86
Federal Natl Mtg Assn 1.50% Dtd 04/27/2015 Due 06/22/2020 Non-Callable Amortization of Premium	06/22/18	-83.60
Federal Natl Mtg Assn 1.875% Dtd 11/16/2015 Due 12/28/2020 Non-Callable Amortization of Premium	06/28/18	-310.00
Federal Natl Mtg Assn 1.375% Dtd 02/05/2016 Due 02/26/2021 Non-Callable Accretion of Discount	06/29/18	14.25
Federal Natl Mtg Assn 1.375% Dtd 10/07/2016 Due 10/07/2021 Non-Callable Accretion of Discount	06/29/18	16.71

2000083 002761 0778

WBSD - CAPITAL PROJECT RESERVE

Account Number: [redacted]
Statement Period: 06/01/18 - 06/30/18

Non-Cash Activity

	Date	Cost
Whatcom Cnty Wash Pub Util Dis LTD GO Ref Bds Taxable 2.10% Dtd 06/05/2012 Due 12/01/2018 Non-Callable Amortization of Premium	06/01/18	-29.40
Total Non-Cash Transactions		**$ -2,658.18**

SECURITY PRICES CONTAINED IN THIS STATEMENT ARE OBTAINED FROM THE MOST RELIABLE SOURCES AVAILABLE BUT ARE NOT GUARANTEED BY BANK OF THE WEST. QUOTED PRICES MAY NOT EQUAL ACTUAL PRICES BECAUSE OF SECURITY SIZE, MARKET PRICE, TERM AND DEMAND.

BANK OF THE WEST
BNP PARIBAS
WEALTH MANAGEMENT

Electronic Funds Transfers

Preauthorized Transfers:
You may request an electronic fund transfer (EFT), such as an ACH transfer from or deposit to your account, by contacting your account Administrator. You may also preauthorize periodic EFTs by contacting your account Administrator. If you would like to know whether a preauthorized EFT has occurred, please contact your account Administrator at the phone number listed on the first page of your statement, or call 1-877-232-7321 (TTY 866-827-6167) between the hours of 8:00 A.M. to 5:00 P.M. Pacific Standard Time.

Error Resolution Notice:
If you think a statement or receipt is wrong or if you need more information about an EFT listed on a statement or receipt, telephone us at 1-877-232-7321 (TTY 866-827-6167) between the hours of 8:00 A.M. to 5:00 P.M. Pacific Standard Time, write to us at Bank of the West, 13300 Crossroads Parkway North, City of Industry, CA 91746, or e-mail us at WMGGIFSOperations@bankofthewest.com as soon as possible. We must hear from you no later than 60 days after we sent the FIRST statement on which the problem or error appeared.

1. Tell us your name and account number (if any).
2. Tell us the dollar amount of the suspected error.
3. Describe the error or the transfer you are unsure about, and explain as clearly as you can why you believe it is an error or why you need more information.

If you contact us verbally, we may require that you send us your complaint or question in writing within 10 business days. We will investigate your complaint and will correct any error promptly. If we take more than 10 business days to do this, we will credit your account for the amount you think is in error, so that you will have the use of the money during the time it takes us to complete our investigation.

BANK OF THE WEST
BNP PARIBAS
WEALTH MANAGEMENT

Received
JUL 16 2018
West Bay Sanitary District

WBSD - RECYCLED WATER CASH FLOW

Account Number: [redacted]
Statement Period: 06/01/18 - 06/30/18

WEST BAY SANITARY DISTRICT
RECYCLED WATER CASH FLOW
500 LAUREL STREET
MENLO PARK CA 94025

SCANNED

Fiduciary
Chuen Ying Lee
(408) 645-3234
Portfolio
Michael D. Smith
(408) 490-2079

Asset Allocation

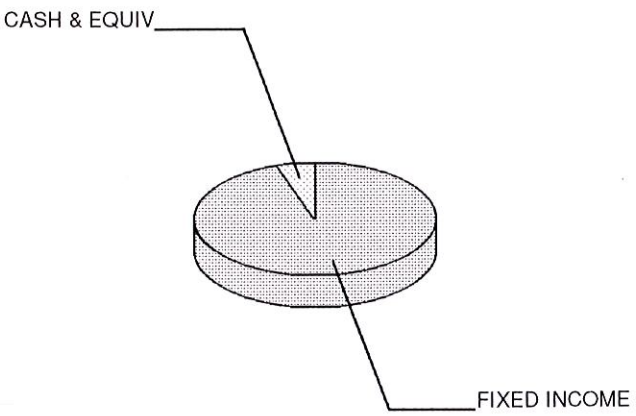

Asset Valuation

Description	Market Value	% of Account
Cash & Equiv	209,628.50	5.4%
Fixed Income	3,661,628.35	94.6%
Total Portfolio	**$ 3,871,256.85**	**100.0%**
Accrued Income	28,220.69	
Total Valuation	**$ 3,899,477.54**	

Market Reconcilement

	Current Period	Year To Date
Beginning Market Value	$ 3,893,605.35	$ 8,000,127.25
Income		
Interest	8,469.35	297,989.99
Purchased Income	0.00	-12,219.03
Disbursements	-577.52	-3,475,302.07
Cash Transfers	0.00	-760,000.00
Realized Gains/(Losses)	0.00	911.52
Change In Accrued Income	343.56	-24,989.37
Change In Market Appreciation/(Depreciation)	1,866.80	-17,091.92
Non-Cash Asset Changes	-4,230.00	-109,948.83
Ending Market Value	$ 3,899,477.54	$ 3,899,477.54

WBSD - RECYCLED WATER CASH FLOW

Account Number: [redacted]
Statement Period: 06/01/18 - 06/30/18

Asset Position As of 06/30/18

Asset Description	Units	Market Value Cost	Est. Annual Income Accruals	Current Yield
Cash Equivalents				
Bank of The West Advantage Acct	209,628.500	209,628.50 209,628.50	3,668.00 283.68	1.75%
Total Cash Equivalents		**$ 209,628.50** **$ 209,628.50**	**3,668.00** **283.68**	**1.75%**
Fixed Income				
Altria Group Inc Cr Sen Sr Glbl Step Cpn Dtd 11/10/2008 Due 11/10/2018 Non-Callable	100,000.000	102,451.00 103,847.00	9,700.00 1,374.16	9.47%
American Express Cr Corp Mtnbe Fr 1.80% Dtd 07/31/2015 Due 07/31/2018 Callable	300,000.000	299,865.00 300,276.00	5,400.00 2,265.00	1.80%
Bank Amer Corp Fr 2.60% Dtd 10/22/2013 Due 01/15/2019 Non-Callable	200,000.000	199,874.00 201,210.00	5,200.00 2,397.77	2.60%
Federal Home Loan Bks Cons Bds 0.875% Dtd 08/26/2016 Due 10/01/2018 Non-Callable	235,000.000	234,334.95 234,661.20	2,056.00 514.06	0.88%
Federal Farm Cr Bks Cons Systemwide Bds 5.05% Dtd 12/27/2006 Due 12/27/2018 Non-Callable	200,000.000	202,780.00 203,510.00	10,100.00 112.22	4.98%
Federal Home Ln Mtg Corp 1.65% Dtd 10/30/2017 Due 10/30/2019 Callable	120,000.000	118,602.00 120,000.00	1,980.00 335.50	1.67%
Federal Home Ln Mtg Corp 1.20% Dtd 03/28/2016 Due 12/28/2018 Callable	250,000.000	248,867.50 249,240.00	3,000.00 774.99	1.21%
Federal Natl Mtg Assn 1.125% Dtd 06/08/2015 Due 07/20/2018 Non-Callable	170,000.000	169,935.40 170,105.40	1,912.00 855.31	1.13%
Federal Natl Mtg Assn Gtd Passthru CTF Pool #469679 2.960% Dtd 11/01/2011 Due 11/01/2018 IPD24	400,000.000	399,724.00 410,125.00	11,840.00 986.66	2.96%
International Business Machs Sr Glbl Nt 7.625% Dtd 10/15/2008 Due 10/15/2018 Callable	100,000.000	101,423.00 102,974.00	7,625.00 1,609.72	7.52%

WBSD - RECYCLED WATER CASH FLOW

Account Number: [redacted]
Statement Period: 06/01/18 - 06/30/18

Asset Position As of 06/30/18

Asset Description	Units	Market Value Cost	Est. Annual Income Accruals	Current Yield
Kansas City MO Arpt Rev Gen Impt Ref Bds A AMT 5.00% Dtd 07/31/2013 Due 09/01/2018 Non-Callable	250,000.000	251,385.00 254,152.50	12,500.00 4,166.66	4.97%
Los Angeles Calif Mun Impt COR Taxable Ref Bds 2015 A Taxable 2.344% Dtd 11/19/2015 Due 11/01/2018 Callable	100,000.000	100,070.00 100,503.00	2,344.00 390.66	2.34%
New York St Dorm Auth Revs Non Rev Bds 3.00% Dtd 12/07/2016 Due 07/01/2018 Non-Callable	300,000.000	300,000.00 302,532.00	9,000.00 4,500.00	3.00%
Sacramento Calif City Uni Sch GO Ref Sch Bds 5.00% Dtd 06/30/2011 Due 07/01/2018 Non-Callable	135,000.000	135,000.00 137,412.45	6,750.00 3,375.00	5.00%
Toyota Motor Credit Corp Fr 1.70% Dtd 01/09/2017 Due 01/09/2019 Non-Callable	150,000.000	149,371.50 149,944.50	2,550.00 1,218.33	1.71%
US Treasury Note 1.50% Dtd 01/31/2014 Due 01/31/2019	200,000.000	199,176.00 199,882.81	3,000.00 1,251.38	1.51%
US Treasury Note 1.25% Dtd 10/31/2013 Due 10/31/2018	150,000.000	149,619.00 149,799.81	1,875.00 315.89	1.25%
US Treasury Note 1.50% Dtd 05/31/2014 Due 05/31/2019	100,000.000	99,256.00 99,712.95	1,500.00 127.04	1.51%
Wyandotte Cnty Kans Uni Sch Di GO Impt Bds B Taxable 2.05% Dtd 12/20/2016 Due 09/01/2018 Non-Callable	200,000.000	199,894.00 200,584.00	4,100.00 1,366.66	2.05%
Total Fixed Income		**$ 3,661,628.35** **$ 3,690,472.62**	**102,432.00** **27,937.01**	**2.80%**
Cash				
Principal Cash		0.00 0.00	0.00	0.00%
Income Cash		0.00 0.00	0.00	0.00%
Total Cash		**$ 0.00** **$ 0.00**	**0.00** **0.00**	**0.00%**

WBSD - RECYCLED WATER CASH FLOW

Account Number: [redacted]
Statement Period: 06/01/18 - 06/30/18

Asset Position As of 06/30/18

Asset Description	Units	Market Value Cost	Est. Annual Income Accruals	Current Yield
Total Market Value		**$ 3,871,256.85** **$ 3,900,101.12**	**106,100.00** **28,220.69**	**2.74%**
Total Market Value Plus Accruals		**$ 3,899,477.54**		

Income Activity

	Date	Income Cash	Principal Cash
Interest Income			
Bank of The West Advantage Acct Int To 05/31/18	06/01/18		399.80
Des Moines Iowa Area Cmnty Col Taxable New Jobs Trainin A Taxable 2.00% Dtd 12/15/2016 Due 06/01/2018 Non-Callable Int To 06/01/18 on 100,000	06/01/18		1,000.00
Des Moines Iowa Area Cmnty Col Taxable New Jobs Trainin B Taxable 2.00% Dtd 12/15/2016 Due 06/01/2018 Non-Callable Int To 06/01/18 on 100,000	06/01/18		1,000.00
Federal Farm Cr Bks Cons Systemwide Bds 5.05% Dtd 12/27/2006 Due 12/27/2018 Non-Callable Int To 06/27/18 on 200,000	06/27/18		5,050.00
Federal Natl Mtg Assn Gtd Passthru CTF Pool #469679 2.960% Dtd 11/01/2011 Due 11/01/2018 IPD24 Int For May 2018 on 400000	06/25/18		1,019.55
Total Interest Income		**$ 0.00**	**$ 8,469.35**
Total Income		**$ 0.00**	**$ 8,469.35**

WBSD - RECYCLED WATER CASH FLOW

Account Number: [redacted]
Statement Period: 06/01/18 - 06/30/18

Disbursement Activity

	Date	Income Cash	Principal Cash
Fees/Expenses			
Monthly Fee To 05/31/18	06/15/18		-577.52
Total Fees/Expenses		**$ 0.00**	**$ -577.52**
Total Disbursements		**$ 0.00**	**$ -577.52**

Purchase Activity

	Date	Income Cash	Principal Cash
Bank of The West Advantage Acct Purchases (3) 06/01/18 To 06/30/18	06/30/18		-208,469.35
Total Purchases		**$ 0.00**	**$ -208,469.35**

Sale Activity

	Date	Proceeds	Realized Gain/Loss
Bank of The West Advantage Acct Sales (1) 06/01/18 To 06/30/18	06/30/18	577.52	
Des Moines Iowa Area Cmnty Col Taxable New Jobs Trainin A Taxable 2.00% Dtd 12/15/2016 Due 06/01/2018 Non-Callable Recd Proceeds on Maturity of 100,000 Par Value	06/01/18	100,000.00	
Des Moines Iowa Area Cmnty Col Taxable New Jobs Trainin B Taxable 2.00% Dtd 12/15/2016 Due 06/01/2018 Non-Callable Recd Proceeds on Maturity of 100,000 Par Value	06/01/18	100,000.00	
Total Sales		**$ 200,577.52**	**$ 0.00**

WBSD - RECYCLED WATER CASH FLOW

Account Number: [redacted]
Statement Period: 06/01/18 - 06/30/18

Non-Cash Activity

	Date	Cost
Des Moines Iowa Area Cmnty Col Taxable New Jobs Trainin A Taxable 2.00% Dtd 12/15/2016 Due 06/01/2018 Non-Callable Amortization of Premium	06/01/18	-372.00
Des Moines Iowa Area Cmnty Col Taxable New Jobs Trainin B Taxable 2.00% Dtd 12/15/2016 Due 06/01/2018 Non-Callable Amortization of Premium	06/01/18	-372.00
Federal Farm Cr Bks Cons Systemwide Bds 5.05% Dtd 12/27/2006 Due 12/27/2018 Non-Callable Amortization of Premium	06/27/18	-3,486.00
Total Non-Cash Transactions		**$ -4,230.00**

SECURITY PRICES CONTAINED IN THIS STATEMENT ARE OBTAINED FROM THE MOST RELIABLE SOURCES AVAILABLE BUT ARE NOT GUARANTEED BY BANK OF THE WEST. QUOTED PRICES MAY NOT EQUAL ACTUAL PRICES BECAUSE OF SECURITY SIZE, MARKET PRICE, TERM AND DEMAND.

BANK OF THE WEST
BNP PARIBAS
WEALTH MANAGEMENT

WBSD-OPERATING RESERVE

Account Number: [redacted]
Statement Period: 06/01/18 - 06/30/18

Received
JUL 13 2018
West Bay Sanitary District

WEST BAY SANITARY DISTRICT
ATTN: PHILLIP L. SCOTT
500 LAUREL STREET
MENLO PARK CA 94025

Fiduciary
Chuen Ying Lee
(408) 645-3234
Portfolio
Michael D. Smith
(408) 490-2079

Asset Allocation

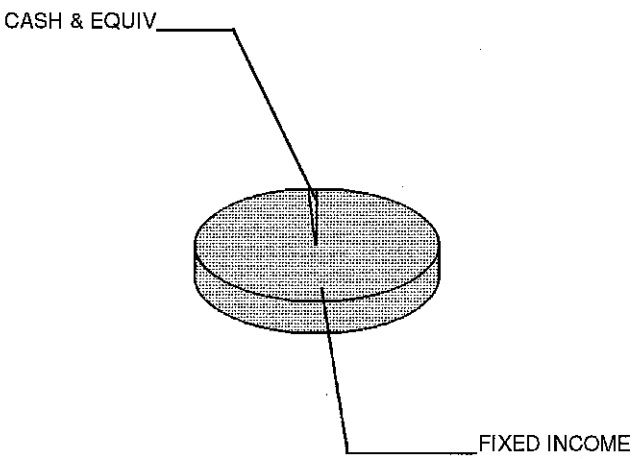

Asset Valuation

Description	Market Value	% of Account
Cash & Equiv	86,917.44	1.1%
Fixed Income	7,802,120.91	98.9%
Total Portfolio	**$ 7,889,038.35**	**100.0%**
Accrued Income	42,060.05	
Total Valuation	**$ 7,931,098.40**	

Market Reconcilement

	Current Period	Year To Date
Beginning Market Value	**$ 7,931,698.59**	**$ 7,535,292.15**
Income		
Interest	17,234.75	316,668.38
Purchased Income	-278.45	-13,308.58
Additions	0.00	332,000.00
Disbursements	-1,178.60	-20,628.95
Realized Gains/(Losses)	-486.23	-22,485.69
Change In Accrued Income	-441.92	10,139.81
Change In Market Appreciation/(Depreciation)	-9,746.06	-126,930.26
Non-Cash Asset Changes	-5,703.68	-79,648.46
Ending Market Value	**$ 7,931,098.40**	**$ 7,931,098.40**

WBSD - OPERATING RESERVE

Account Number: [redacted]
Statement Period: 06/01/18 - 06/30/18

Asset Position As of 06/30/18

Asset Description	Units	Market Value Cost	Est. Annual Income Accruals	Current Yield
Cash Equivalents				
Bank of The West Advantage Acct	86,917.440	86,917.44 86,917.44	1,521.00 109.23	1.75%
Total Cash Equivalents		**$ 86,917.44** **$ 86,917.44**	**1,521.00** **109.23**	**1.75%**
Fixed Income				
Alibaba Group Hldg LTD Sr 144a 2.50% Dtd 11/28/2014 Due 11/28/2019 Callable	200,000.000	198,666.00 198,364.00	5,000.00 458.33	2.52%
Atlantic Richfield Co Deb 8.25% Dtd 02/01/1992 Due 02/01/2022 Non-Callable	15,000.000	17,370.00 18,187.20	1,237.00 515.62	7.12%
Capital One Bk USA Natl Assn CTF Dep 1.40% Dtd 09/28/2016 Due 09/28/2020 Non-Callable	100,000.000	96,541.00 100,000.00	1,400.00 364.38	1.45%
Capital One Bk USA Natl Assn Fr 2.15% Dtd 11/21/2013 Due 11/21/2018 Callable	280,000.000	279,507.20 279,680.80	6,020.00 668.88	2.15%
Constellation Brands Inc Sr Glbl Nt 2.25% Dtd 11/07/2017 Due 11/06/2020 Callable	75,000.000	73,193.25 74,824.50	1,687.00 257.81	2.31%
Federal Home Ln Mtg Corp Partn Gold Group #G13107 5.500% Dtd 03/01/2008 Due 07/01/2020 IPD14	9,792.480	9,871.60 10,288.22	538.00 44.88	5.46%
Federal Home Ln Mtg Corp Partn Gold Group #G11940 5.500% Dtd 03/01/2006 Due 05/01/2020 IPD14	14,148.450	14,296.87 14,926.62	778.00 64.84	5.44%
Federal Home Loan Bks Cons Bds 1.875% Dtd 11/30/2016 Due 11/29/2021 Non-Callable	200,000.000	194,682.00 197,269.55	3,750.00 333.33	1.93%
Federal Home Loan Bks Cons Bds 2.28% Dtd 10/26/2017 Due 10/26/2022 Callable	80,000.000	78,030.40 79,680.00	1,824.00 329.33	2.34%
Federal Home Loan Bks Cons Bds 2.50% Dtd 03/15/2018 Due 09/15/2020 Callable	120,000.000	119,811.60 119,910.00	3,000.00 883.33	2.50%

WBSD-OPERATING RESERVE

Account Number: [redacted]
Statement Period: 06/01/18 - 06/30/18

Asset Position As of 06/30/18

Asset Description	Units	Market Value Cost	Est. Annual Income Accruals	Current Yield
Federal Farm Cr Bks Cons Systemwide Bds 1.95% Dtd 09/17/2013 Due 09/17/2018 Non-Callable	50,000.000	50,003.00 50,241.00	975.00 281.66	1.95%
Federal Farm Cr Bks Cons Systemwide Bds 2.10% Dtd 10/04/2017 Due 04/04/2022 Callable	140,000.000	136,229.80 140,000.00	2,940.00 710.50	2.16%
Federal Farm Cr Bks Cons Systemwide Bds 2.03% Dtd 04/19/2017 Due 07/19/2021 Callable	40,000.000	38,970.80 40,000.00	812.00 365.40	2.08%
Federal Farm Cr Bks Cons Systemwide Bds 1.97% Dtd 05/17/2017 Due 05/17/2021 Callable	120,000.000	117,265.20 118,005.72	2,364.00 288.93	2.02%
Federal Farm Cr Bks Cons Systemwide Bds 1.62% Dtd 09/11/2017 Due 09/11/2020 Callable	180,000.000	175,986.00 177,382.70	2,916.00 891.00	1.66%
Federal Home Loan Bks Cons Bds 4.625% Dtd 05/25/2005 Due 06/12/2020 Non-Callable	200,000.000	207,642.00 212,048.00	9,250.00 488.19	4.45%
Federal Home Loan Bks Cons Bds 4.50% Dtd 08/12/2009 Due 09/13/2019 Non-Callable	200,000.000	204,834.00 209,328.00	9,000.00 2,700.00	4.39%
Federal Home Loan Bks Cons Bds 4.125% Dtd 11/13/2009 Due 12/13/2019 Non-Callable	200,000.000	204,590.00 207,834.00	8,250.00 412.50	4.03%
Federal Farm Cr Bks Cons Systemwide Bds 5.32% Dtd 10/03/2007 Due 09/03/2019 Non-Callable	50,000.000	51,669.50 52,774.00	2,660.00 871.88	5.15%
Federal Home Loan Bks Cons Bds 2.875% Dtd 08/27/2010 Due 09/11/2020 Non-Callable	60,000.000	60,306.00 62,095.80	1,725.00 527.08	2.86%
Federal Home Loan Bks Cons Bds 1.75% Dtd 06/03/2013 Due 06/12/2020 Non-Callable	60,000.000	59,035.20 60,277.80	1,050.00 55.41	1.78%
Federal Home Loan Bks Cons Bds 2.00% Dtd 08/12/2013 Due 09/13/2019 Non-Callable	60,000.000	59,689.80 60,745.20	1,200.00 359.99	2.01%
Federal Home Ln Mtg Corp Step Cpn Dtd 09/30/2016 Due 09/30/2021 Callable	200,000.000	194,206.00 199,800.00	2,100.00 530.83	1.08%

WBSD - OPERATING RESERVE

Account Number: [redacted]
Statement Period: 06/01/18 - 06/30/18

Asset Position As of 06/30/18

Asset Description	Units	Market Value Cost	Est. Annual Income Accruals	Current Yield
Federal Home Ln Mtg Corp 1.50% Dtd 12/30/2016 Due 12/30/2019 Callable	120,000.000	117,720.00 120,000.00	1,800.00 905.00	1.53%
Federal Home Ln Mtg Corp 1.75% Dtd 12/30/2016 Due 12/30/2020 Callable	120,000.000	117,084.00 120,000.00	2,100.00 1,055.83	1.79%
Federal Home Ln Mtg Corp Medium Term Nts 1.625% Dtd 04/27/2017 Due 07/27/2020 Callable	40,000.000	39,236.00 40,000.00	650.00 115.55	1.66%
Federal Home Ln Mtg Corp 1.60% Dtd 05/15/2017 Due 05/15/2020 Callable	240,000.000	235,728.00 240,000.00	3,840.00 490.66	1.63%
Federal Home Ln Mtg Corp 2.00% Dtd 04/26/2017 Due 10/26/2021 Callable	240,000.000	232,972.80 240,000.00	4,800.00 866.66	2.06%
Federal Home Ln Mtg Corp 2.00% Dtd 10/12/2017 Due 10/12/2021 Callable	120,000.000	116,979.60 120,000.00	2,400.00 526.66	2.05%
Federal Home Ln Mtg Corp 2.25% Dtd 12/29/2017 Due 12/29/2021 Callable	120,000.000	117,705.60 120,000.00	2,700.00 15.00	2.29%
Federal Home Ln Mtg Corp 3.00% Dtd 03/15/2018 Due 03/15/2023 Callable	120,000.000	119,662.80 119,880.00	3,600.00 1,060.00	3.01%
Federal Natl Mtg Assn 1.50% Dtd 10/19/2015 Due 11/30/2020 Non-Callable	50,000.000	48,680.50 49,693.50	750.00 64.58	1.54%
Federal Natl Mtg Assn 1.875% Dtd 11/16/2015 Due 12/28/2020 Non-Callable	60,000.000	58,914.00 60,946.80	1,125.00 9.37	1.91%
Federal Natl Mtg Assn 1.375% Dtd 02/05/2016 Due 02/26/2021 Non-Callable	90,000.000	87,122.70 89,318.61	1,237.00 429.68	1.42%
Federal Natl Mtg Assn 1.25% Dtd 05/16/2016 Due 05/06/2021 Non-Callable	160,000.000	153,998.40 158,517.37	2,000.00 305.55	1.30%
Federal Natl Mtg Assn 1.25% Dtd 09/30/2016 Due 09/30/2019 Callable	400,000.000	394,252.00 399,900.00	5,000.00 1,263.88	1.27%

WBSD - OPERATING RESERVE

Account Number: [redacted]
Statement Period: 06/01/18 - 06/30/18

Asset Position As of 06/30/18

Asset Description	Units	Market Value Cost	Est. Annual Income Accruals	Current Yield
Federal Natl Mtg Assn 1.375% Dtd 10/07/2016 Due 10/07/2021 Non-Callable	90,000.000	86,310.90 89,016.05	1,237.00 288.75	1.43%
Federal Natl Mtg Assn 2.00% Dtd 01/09/2017 Due 01/05/2022 Non-Callable	270,000.000	263,301.30 268,520.72	5,400.00 2,640.00	2.05%
Federal Natl Mtg Assn 1.875% Dtd 04/10/2017 Due 04/05/2022 Non-Callable	160,000.000	155,201.60 161,411.20	3,000.00 716.66	1.93%
Federal Natl Mtg Assn 1.80% Dtd 11/30/2016 Due 05/26/2021 Callable	60,000.000	58,271.40 60,000.00	1,080.00 105.00	1.85%
Federal Home Ln Mtg Corp 2.375% Dtd 01/13/2012 Due 01/13/2022 Non-Callable	90,000.000	88,818.30 92,006.10	2,137.00 997.50	2.41%
Federal Home Ln Mtg Corp 1.75% Dtd 04/16/2012 Due 05/30/2019 Non-Callable	40,000.000	39,777.20 40,338.40	700.00 60.27	1.76%
Federal Home Ln Mtg Corp 1.25% Dtd 10/02/2012 Due 10/02/2019 Non-Callable	40,000.000	39,392.40 40,155.60	500.00 123.61	1.27%
Federal Home Ln Mtg Corp 1.375% Dtd 04/04/2013 Due 05/01/2020 Non-Callable	50,000.000	48,971.00 49,785.16	687.00 114.58	1.40%
Federal Natl Mtg Assn Gtd Passthru CTF Pool #386765 5.420% Dtd 01/01/2004 Due 01/01/2019 IPD24	45,755.890	45,941.66 50,188.50	2,479.00 206.66	5.40%
Federal Natl Mtg Assn Gtd Passthru CTF Pool #461455 5.400% Dtd 12/01/2003 Due 12/01/2018 IPD24	235,541.460	235,117.49 265,131.35	12,719.00 1,059.93	5.41%
Federal Natl Mtg Assn Gtd REMIC Passthru Tr REMIC Tr Ser 2009 M1 Cl A2 4.287% Dtd 10/01/2009 Due 07/25/2019 IPD24	66,167.190	66,493.28 70,881.59	2,836.00 236.38	4.27%
Federal Natl Mtg Assn Gtd Passthru CTF Pool #797828 5.000% Dtd 04/01/2005 Due 04/01/2020 IPD24	28,266.280	28,751.61 29,838.58	1,413.00 117.77	4.92%

WBSD - OPERATING RESERVE

Account Number: [redacted]
Statement Period: 06/01/18 - 06/30/18

Asset Position As of 06/30/18

Asset Description	Units	Market Value Cost	Est. Annual Income Accruals	Current Yield
Florida St Brd Admin Fin Corp Rev Bds 2016a Taxable 2.163% Dtd 03/08/2016 Due 07/01/2019 Callable	55,000.000	54,659.55 55,718.85	1,189.00 594.82	2.18%
GE Capital Internotes Fr 5.50% Dtd 11/05/2009 Due 11/15/2021 Non-Callable	50,000.000	52,375.00 55,214.00	2,750.00 351.38	5.25%
Home Depot Inc Sr Glbl Nt 2.00% Dtd 02/12/2016 Due 04/01/2021 Callable	50,000.000	48,790.00 49,899.00	1,000.00 250.00	2.05%
Keybank National Association Regs Bd 2.50% Dtd 11/24/2014 Due 12/15/2019 Non-Callable	250,000.000	248,032.50 250,732.50	6,250.00 277.77	2.52%
Medtronic Inc Sr Glbl 2.50% Dtd 03/15/2015 Due 03/15/2020 Callable	250,000.000	248,265.00 250,420.00	6,250.00 1,840.27	2.52%
Metropolitan Transn Auth N Y D Tax Fund Bds 2010a Taxable 4.655% Dtd 03/25/2010 Due 11/15/2018 Callable	100,000.000	100,659.00 101,267.00	4,655.00 594.80	4.62%
Oakland Calif Pension Oblig Taxable Pension Oblig Bd Taxable Zero Cpn Dtd 10/17/2001 Due 12/15/2019 Non-Callable	60,000.000	57,379.20 57,431.64	0.00	0.00%
Philip Morris Intl Inc Sr Nt 4.50% Dtd 03/26/2010 Due 03/26/2020 Non-Callable	80,000.000	81,881.60 83,898.40	3,600.00 950.00	4.40%
Port Morrow Ore Transmission F Rev Bds Taxable 2.737% Dtd 08/26/2015 Due 09/01/2021 Callable	200,000.000	198,262.00 207,570.00	5,474.00 1,824.66	2.76%
Small Business Admin Gtd Ln Pool Ctfs #508468 Prime -0.175 Adj Quarterly Dtd 06/01/2008 Due 04/25/2020	10,296.050	10,315.20 10,740.07	316.00 4.39	3.07%
Starbucks Corp Sr Glbl 2.10% Dtd 02/04/2016 Due 02/04/2021 Callable	50,000.000	48,569.00 49,987.00	1,050.00 428.75	2.16%
Teva Pharmaceutical Finance IV Sr Nt 2.25% Dtd 12/18/2012 Due 03/18/2020 Callable	250,000.000	240,982.50 245,882.50	5,625.00 1,609.37	2.33%

2000063 002766 0778

WBSD - OPERATING RESERVE

Account Number: [redacted]
Statement Period: 06/01/18 - 06/30/18

Asset Position As of 06/30/18

Asset Description	Units	Market Value Cost	Est. Annual Income Accruals	Current Yield
3M Co Fr 2.00% Dtd 06/26/2012 Due 06/26/2022 Non-Callable	100,000.000	96,063.00 98,933.76	2,000.00 27.77	2.08%
US Treasury Note 2.00% Dtd 07/31/2013 Due 07/31/2020	40,000.000	39,558.80 39,562.50	800.00 333.69	2.02%
US Treasury Note 1.625% Dtd 03/15/2017 Due 03/15/2020	120,000.000	118,236.00 119,402.47	1,950.00 572.28	1.65%
Waco Tex Indpt Sch Dist Ref Bds Taxable 4.00% Dtd 12/01/2012 Due 02/15/2020 Non-Callable	270,000.000	274,870.80 284,212.80	10,800.00 4,080.00	3.93%
Wells Fargo & Co New Sr Glbl 2.50% Dtd 03/04/2016 Due 03/04/2021 Non-Callable	250,000.000	244,420.00 248,550.00	6,250.00 2,031.24	2.56%
Total Fixed Income		**$ 7,802,120.91** **$ 7,988,615.13**	**196,625.00** **41,950.82**	**2.52%**
Cash				
Principal Cash		0.00 0.00	0.00	0.00%
Income Cash		0.00 0.00	0.00	0.00%
Total Cash		**$ 0.00** **$ 0.00**	**0.00** **0.00**	**0.00%**
Total Market Value		**$ 7,889,038.35** **$ 8,075,532.57**	**198,146.00** **42,060.05**	**2.51%**
Total Market Value Plus Accruals		**$ 7,931,098.40**		

Income Activity

	Date	Income Cash	Principal Cash
Interest Income			
Bank of The West Advantage Acct Int To 05/31/18	06/01/18		114.99

WBSD - OPERATING RESERVE

Account Number: [redacted]
Statement Period: 06/01/18 - 06/30/18

Income Activity

	Date	Income Cash	Principal Cash
Federal Home Ln Mtg Corp Partn Gold Group #G13107 5.500% Dtd 03/01/2008 Due 07/01/2020 IPD14 Int For May 2018 on 10875.74	06/15/18		49.85
Federal Home Ln Mtg Corp Partn Gold Group #G11940 5.500% Dtd 03/01/2006 Due 05/01/2020 IPD14 Int For May 2018 on 15544.13	06/15/18		71.24
Federal Home Loan Bks Cons Bds 4.625% Dtd 05/25/2005 Due 06/12/2020 Non-Callable Int To 06/12/18 on 200,000	06/12/18		4,625.00
Federal Home Loan Bks Cons Bds 4.125% Dtd 11/13/2009 Due 12/13/2019 Non-Callable Int To 06/13/18 on 200,000	06/13/18		4,125.00
Federal Home Loan Bks Cons Bds 1.75% Dtd 06/03/2013 Due 06/12/2020 Non-Callable Int To 06/12/18 on 60,000	06/12/18		525.00
Federal Home Ln Mtg Corp 2.25% Dtd 12/29/2017 Due 12/29/2021 Callable Int 12/29/17 To 06/29/18 on 120000	06/29/18		1,350.00
Federal Natl Mtg Assn 1.875% Dtd 11/16/2015 Due 12/28/2020 Non-Callable Int To 06/28/18 on 60,000	06/28/18		562.50
Federal Natl Mtg Assn Gtd Passthru CTF Pool #386765 5.420% Dtd 01/01/2004 Due 01/01/2019 IPD24 Int For May 2018 on 45903.32	06/25/18		207.33
Federal Natl Mtg Assn Gtd Passthru CTF Pool #461455 5.400% Dtd 12/01/2003 Due 12/01/2018 IPD24 Int For May 2018 on 235893.58	06/25/18		1,061.52
Federal Natl Mtg Assn Gtd REMIC Passthru Tr REMIC Tr Ser 2009 M1 Cl A2 4.287% Dtd 10/01/2009 Due 07/25/2019 IPD24 Int To 06/01/18 on 66279.43	06/25/18		236.78

W[redacted]ERATING RESERVE

Account Number: [redacted]
Statement Period: 06/01/18 - 06/30/18

Income Activity

	Date	Income Cash	Principal Cash
Federal Natl Mtg Assn Gtd Passthru CTF Pool #797828 5.000% Dtd 04/01/2005 Due 04/01/2020 IPD24 Int For May 2018 on 30877.82	06/25/18		128.66
Keybank National Association Regs Bd 2.50% Dtd 11/24/2014 Due 12/15/2019 Non-Callable Int To 06/15/18 on 250,000	06/15/18		3,125.00
Small Business Admin Gtd Ln Pool Ctfs #508468 Prime -0.175 Adj Quarterly Dtd 06/01/2008 Due 04/25/2020 Int To 05/01/18 on 13608.32	06/25/18		51.88
3M Co Fr 2.00% Dtd 06/26/2012 Due 06/26/2022 Non-Callable Int To 06/26/18 on 100,000	06/26/18		1,000.00
Total Interest Income		**$ 0.00**	**$ 17,234.75**
Purchased Income			
US Treasury Note 2.00% Dtd 07/31/2013 Due 07/31/2020 Accrued Int To 06/06/18 Paid on Purchase of 40,000	06/06/18		-278.45
Total Purchased Income		**$ 0.00**	**$ -278.45**
Total Income		**$ 0.00**	**$ 16,956.30**

Disbursement Activity

	Date	Income Cash	Principal Cash
Fees/Expenses			
Monthly Fee To 05/31/18	06/15/18		-1,178.60
Total Fees/Expenses		**$ 0.00**	**$ -1,178.60**
Total Disbursements		**$ 0.00**	**$ -1,178.60**

WBSD - OPERATING RESERVE

Account Number: [redacted]
Statement Period: 06/01/18 - 06/30/18

Purchase Activity

	Date	Income Cash	Principal Cash
Bank of The West Advantage Acct Purchases (8) 06/01/18 To 06/30/18	06/30/18		-26,249.29
US Treasury Note 2.00% Dtd 07/31/2013 Due 07/31/2020 Purchased 40000 06/05/18 From Morgan Stanley & Co @ 98.90625	06/06/18		-39,562.50
Total Purchases		**$ 0.00**	**$ -65,811.79**

Sale Activity

	Date	Proceeds	Realized Gain/Loss
Bank of The West Advantage Acct Sales (2) 06/01/18 To 06/30/18	06/30/18	41,019.55	
Federal Home Ln Mtg Corp Partn Gold Group #G13107 5.500% Dtd 03/01/2008 Due 07/01/2020 IPD14 Prin Pmt For May 2018	06/15/18	1,083.26	-54.84
Federal Home Ln Mtg Corp Partn Gold Group #G11940 5.500% Dtd 03/01/2006 Due 05/01/2020 IPD14 Prin Pmt For May 2018	06/15/18	1,395.68	-76.76
Federal Natl Mtg Assn Gtd Passthru CTF Pool #386765 5.420% Dtd 01/01/2004 Due 01/01/2019 IPD24 Prin Pmt For May 2018	06/25/18	147.43	-14.28
Federal Natl Mtg Assn Gtd Passthru CTF Pool #461455 5.400% Dtd 12/01/2003 Due 12/01/2018 IPD24 Prin Pmt For May 2018	06/25/18	352.12	-44.24
Federal Natl Mtg Assn Gtd REMIC Passthru Tr REMIC Tr Ser 2009 M1 Cl A2 4.287% Dtd 10/01/2009 Due 07/25/2019 IPD24 Prin Pmt For 06/01/18	06/25/18	112.24	-8.00
Federal Natl Mtg Assn Gtd Passthru CTF Pool #797828 5.000% Dtd 04/01/2005 Due 04/01/2020 IPD24 Prin Pmt For May 2018	06/25/18	2,611.54	-145.27

WBSD - OPERATING RESERVE

Account Number: [redacted]
Statement Period: 06/01/18 - 06/30/18

Sale Activity

	Date	Proceeds	Realized Gain/Loss
Small Business Admin Gtd Ln Pool Ctfs #508468 Prime -0.175 Adj Quarterly Dtd 06/01/2008 Due 04/25/2020 Prin Pmt For 05/01/18	06/25/18	3,312.27	-142.84
Total Sales		**$ 50,034.09**	**$ -486.23**

Non-Cash Activity

	Date	Cost
Federal Home Loan Bks Cons Bds 4.625% Dtd 05/25/2005 Due 06/12/2020 Non-Callable Amortization of Premium	06/12/18	-2,954.00
Federal Home Loan Bks Cons Bds 4.125% Dtd 11/13/2009 Due 12/13/2019 Non-Callable Amortization of Premium	06/13/18	-2,572.00
Federal Home Loan Bks Cons Bds 1.75% Dtd 06/03/2013 Due 06/12/2020 Non-Callable Amortization of Premium	06/12/18	-67.80
Federal Natl Mtg Assn 1.875% Dtd 11/16/2015 Due 12/28/2020 Non-Callable Amortization of Premium	06/28/18	-186.00
Federal Natl Mtg Assn 1.375% Dtd 02/05/2016 Due 02/26/2021 Non-Callable Accretion of Discount	06/29/18	21.38
Federal Natl Mtg Assn 1.25% Dtd 05/16/2016 Due 05/06/2021 Non-Callable Accretion of Discount	06/29/18	43.35
Federal Natl Mtg Assn 1.375% Dtd 10/07/2016 Due 10/07/2021 Non-Callable Accretion of Discount	06/29/18	25.07
Federal Natl Mtg Assn 2.00% Dtd 01/09/2017 Due 01/05/2022 Non-Callable Accretion of Discount	06/29/18	45.06

WBSD - OPERATING RESERVE

Account Number: [redacted]
Statement Period: 06/01/18 - 06/30/18

Non-Cash Activity

	Date	Cost
Federal Home Ln Mtg Corp 1.375% Dtd 04/04/2013 Due 05/01/2020 Non-Callable Accretion of Discount	06/29/18	9.74
Keybank National Association Regs Bd 2.50% Dtd 11/24/2014 Due 12/15/2019 Non-Callable Amortization of Premium	06/15/18	-237.50
Oakland Calif Pension Oblig Taxable Pension Oblig Bd Taxable Zero Cpn Dtd 10/17/2001 Due 12/15/2019 Non-Callable Original Issue Discount	06/29/18	146.75
3M Co Fr 2.00% Dtd 06/26/2012 Due 06/26/2022 Non-Callable Accretion of Discount	06/29/18	22.27
Total Non-Cash Transactions		**$ -5,703.68**

SECURITY PRICES CONTAINED IN THIS STATEMENT ARE OBTAINED FROM THE MOST RELIABLE SOURCES AVAILABLE BUT ARE NOT GUARANTEED BY BANK OF THE WEST. QUOTED PRICES MAY NOT EQUAL ACTUAL PRICES BECAUSE OF SECURITY SIZE, MARKET PRICE, TERM AND DEMAND.

BANK OF THE WEST
BNP PARIBAS
WEALTH MANAGEMENT

WBSD - RATE STABILIZATION RESERVE

Account Number: [redacted]
Statement Period: 06/01/18 - 06/30/18

WEST BAY SANITARY DISTRICT
RATE STABILIZATION RESERVE
500 LAUREL STREET
MENLO PARK CA 94025

Received
JUL 16 2018
West Bay Sanitary District

Fiduciary
Chuen Ying Lee
(408) 645-3234
Portfolio
Michael D. Smith
(408) 490-2079

Asset Allocation

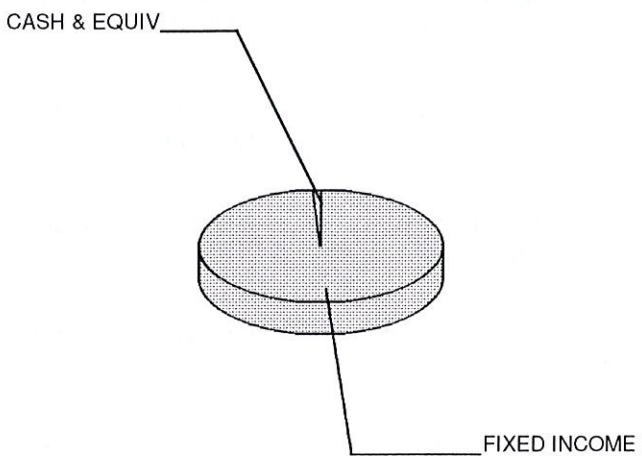

Asset Valuation

Description	Market Value	% of Account
Cash & Equiv	27,123.99	0.5%
Fixed Income	5,501,091.38	99.5%
Total Portfolio	**$ 5,528,215.37**	**100.0%**
Accrued Income	49,529.91	
Total Valuation	**$ 5,577,745.28**	

Market Reconcilement

	Current Period	Year To Date
Beginning Market Value	**$ 5,575,486.53**	**$ 2,980,052.51**
Income		
Interest	6,777.24	191,265.20
Purchased Income	0.00	-11,800.89
Additions	0.00	2,600,000.00
Disbursements	-826.32	-11,715.62
Realized Gains/(Losses)	-9.73	-16,583.27
Change In Accrued Income	5,204.00	14,269.11
Change In Market Appreciation/(Depreciation)	-7,629.71	-76,137.10
Non-Cash Asset Changes	-1,256.73	-91,604.66
Ending Market Value	**$ 5,577,745.28**	**$ 5,577,745.28**

WBSD - RATE STABILIZATION RESERVE

Account Number: [redacted]
Statement Period: 06/01/18 - 06/30/18

Asset Position As of 06/30/18

Asset Description	Units	Market Value Cost	Est. Annual Income Accruals	Current Yield
Cash Equivalents				
Bank of The West Advantage Acct	27,123.990	27,123.99 27,123.99	474.00 34.78	1.75%
Total Cash Equivalents		**$ 27,123.99** **$ 27,123.99**	**474.00** **34.78**	**1.75%**
Fixed Income				
Arizona Brd Regents Ctfs Partn Ref Cops 2015b Taxable 1.62% Dtd 05/12/2015 Due 06/01/2019 Callable	100,000.000	99,083.00 100,118.00	1,620.00 135.00	1.63%
Federal Home Loan Bks Cons Bds 1.85% Dtd 08/15/2017 Due 08/15/2022 Non-Callable	235,000.000	226,239.20 236,692.00	4,347.00 1,642.38	1.92%
Federal Home Loan Bks Cons Bds 2.50% Dtd 03/15/2018 Due 09/15/2020 Callable	100,000.000	99,843.00 99,925.00	2,500.00 736.11	2.50%
Federal Farm Cr Bks Cons Systemwide Bds 2.40% Dtd 06/17/2015 Due 06/17/2022 Non-Callable	235,000.000	231,963.80 240,600.05	5,640.00 219.33	2.43%
Federal Farm Cr Bks Cons Systemwide Bds 1.90% Dtd 07/19/2017 Due 07/19/2022 Non-Callable	80,000.000	77,398.40 80,344.00	1,520.00 683.99	1.96%
Federal Farm Cr Bks Cons Systemwide Bds 1.72% Dtd 07/26/2017 Due 07/26/2021 Non-Callable	235,000.000	228,168.55 235,627.45	4,042.00 1,740.30	1.77%
Federal Farm Cr Bks Cons Systemwide Bds 1.90% Dtd 08/03/2017 Due 08/03/2022 Non-Callable	85,000.000	82,199.25 85,200.60	1,615.00 663.94	1.96%
Federal Farm Cr Bks Cons Systemwide Bds 2.75% Dtd 03/01/2018 Due 09/01/2021 Callable	100,000.000	99,881.00 99,950.00	2,750.00 916.66	2.75%
Federal Farm Cr Bks Cons Systemwide Bds 2.85% Dtd 03/07/2018 Due 03/07/2022 Callable	80,000.000	79,964.00 80,000.00	2,280.00 721.99	2.85%
Federal Home Loan Bks Cons Bds 4.50% Dtd 08/12/2009 Due 09/13/2019 Non-Callable	100,000.000	102,417.00 104,555.00	4,500.00 1,350.00	4.39%

WBSD - RATE STABILIZATION RESERVE

Account Number: [redacted]
Statement Period: 06/01/18 - 06/30/18

Asset Position As of 06/30/18

Asset Description	Units	Market Value Cost	Est. Annual Income Accruals	Current Yield
Federal Home Loan Bks Cons Bds 1.625% Dtd 11/07/2012 Due 12/10/2021 Non-Callable	235,000.000	226,925.40 234,353.75	3,818.00 222.76	1.68%
Federal Home Loan Bks Cons Bds 2.00% Dtd 08/12/2013 Due 09/13/2019 Non-Callable	40,000.000	39,793.20 40,496.80	800.00 239.99	2.01%
Federal Home Ln Mtg Corp Step Cpn Dtd 08/25/2016 Due 08/25/2021 Callable	60,000.000	58,154.40 60,000.00	825.00 288.75	1.42%
Federal Home Ln Mtg Corp 1.50% Dtd 09/30/2016 Due 03/30/2021 Callable	90,000.000	86,917.50 90,000.00	1,350.00 341.25	1.55%
Federal Home Ln Mtg Corp 1.75% Dtd 12/30/2016 Due 12/30/2020 Callable	40,000.000	39,028.00 40,000.00	700.00 351.94	1.79%
Federal Home Ln Mtg Corp 1.60% Dtd 05/15/2017 Due 05/15/2020 Callable	40,000.000	39,288.00 40,000.00	640.00 81.77	1.63%
Federal Home Ln Mtg Corp 3.00% Dtd 03/15/2018 Due 03/15/2023 Callable	40,000.000	39,887.60 39,960.00	1,200.00 353.33	3.01%
Federal Natl Mtg Assn 1.50% Dtd 10/19/2015 Due 11/30/2020 Non-Callable	250,000.000	243,402.50 249,517.50	3,750.00 322.91	1.54%
Federal Natl Mtg Assn 1.375% Dtd 02/05/2016 Due 02/26/2021 Non-Callable	235,000.000	227,487.05 233,363.23	3,231.00 1,121.96	1.42%
Federal Natl Mtg Assn 1.25% Dtd 05/16/2016 Due 05/06/2021 Non-Callable	130,000.000	125,123.70 128,687.99	1,625.00 248.26	1.30%
Federal Natl Mtg Assn 1.25% Dtd 08/19/2016 Due 08/17/2021 Non-Callable	130,000.000	124,438.60 128,335.75	1,625.00 604.86	1.31%
Federal Natl Mtg Assn 1.375% Dtd 10/07/2016 Due 10/07/2021 Non-Callable	235,000.000	225,367.35 232,951.43	3,231.00 753.95	1.43%
Federal Natl Mtg Assn 2.00% Dtd 01/09/2017 Due 01/05/2022 Non-Callable	235,000.000	229,169.65 238,214.80	4,700.00 2,297.77	2.05%

WBSD - RATE STABILIZATION RESERVE

Account Number: [redacted]
Statement Period: 06/01/18 - 06/30/18

Asset Position As of 06/30/18

Asset Description	Units	Market Value Cost	Est. Annual Income Accruals	Current Yield
Federal Natl Mtg Assn 1.875% Dtd 04/10/2017 Due 04/05/2022 Non-Callable	95,000.000	92,150.95 95,317.30	1,781.00 425.52	1.93%
Federal Home Ln Mtg Corp 2.375% Dtd 01/13/2012 Due 01/13/2022 Non-Callable	235,000.000	231,914.45 241,650.50	5,581.00 2,604.58	2.41%
Federal Home Ln Mtg Corp 1.375% Dtd 04/04/2013 Due 05/01/2020 Non-Callable	200,000.000	195,884.00 199,472.00	2,750.00 458.33	1.40%
Federal Home Ln Mtg Corp 1.50% Dtd 01/17/2017 Due 01/17/2020 Non-Callable	250,000.000	246,072.50 250,210.00	3,750.00 1,708.33	1.52%
Federal Natl Mtg Assn Gtd Passthru CTF Pool #466584 3.470% Dtd 11/01/2010 Due 11/01/2020 IPD24	69,533.420	70,344.18 74,661.49	2,412.00 201.06	3.43%
Florida St Brd Admin Fin Corp Rev Bds 2016a Taxable 2.163% Dtd 03/08/2016 Due 07/01/2019 Callable	40,000.000	39,752.40 40,522.80	865.00 432.59	2.18%
Silicon Vy Clean Wtr Calif Was Rev Bds 4.00% Dtd 11/24/2015 Due 08/01/2018 Non-Callable --- 500,000 Restricted ---	500,000.000	501,095.00 508,195.00	20,000.00 8,333.33	3.99%
Silicon Vy Clean Wtr Calif Was Rev Bds 4.00% Dtd 11/24/2015 Due 08/01/2019 Non-Callable --- 335,000 Restricted ---	335,000.000	344,463.75 350,436.80	13,400.00 5,583.33	3.89%
Silicon Vy Clean Wtr Calif Was Rev Bds 5.00% Dtd 11/24/2015 Due 08/01/2020 Non-Callable --- 650,000 Restricted ---	650,000.000	696,501.00 712,016.50	32,500.00 13,541.66	4.67%
Skagit Cnty Wash Sch Dist No 1 GO Bds 2011b Taxable 4.013% Dtd 06/01/2011 Due 12/01/2019 Non-Callable	50,000.000	50,773.00 52,008.50	2,006.00 167.20	3.95%
Total Fixed Income		**$ 5,501,091.38** **$ 5,643,384.24**	**143,354.00** **49,495.13**	**2.61%**

WBSD - RATE STABILIZATION RESERVE

Account Number: [redacted]
Statement Period: 06/01/18 - 06/30/18

Asset Position As of 06/30/18

Asset Description	Units	Market Value Cost	Est. Annual Income Accruals	Current Yield
Cash				
Principal Cash		0.00 0.00	0.00	0.00%
Income Cash		0.00 0.00	0.00	0.00%
Total Cash		**$ 0.00** **$ 0.00**	**0.00** **0.00**	**0.00%**
Total Market Value		**$ 5,528,215.37** **$ 5,670,508.23**	**143,828.00** **49,529.91**	**2.60%**
Total Market Value Plus Accruals		**$ 5,577,745.28**		

Income Activity

	Date	Income Cash	Principal Cash
Interest Income			
Bank of The West Advantage Acct Int To 05/31/18	06/01/18		26.46
Arizona Brd Regents Ctfs Partn Ref Cops 2015b Taxable 1.62% Dtd 05/12/2015 Due 06/01/2019 Callable Int To 06/01/18 on 100,000	06/01/18		810.00
Federal Farm Cr Bks Cons Systemwide Bds 2.40% Dtd 06/17/2015 Due 06/17/2022 Non-Callable Int To 06/17/18 on 235,000	06/18/18		2,820.00
Federal Home Loan Bks Cons Bds 1.625% Dtd 11/07/2012 Due 12/10/2021 Non-Callable Int To 06/10/18 on 235,000	06/11/18		1,909.37
Federal Natl Mtg Assn Gtd Passthru CTF Pool #466584 3.470% Dtd 11/01/2010 Due 11/01/2020 IPD24 Int For May 2018 on 69665.32	06/25/18		208.16

WBSD RATE STABILIZATION RESERVE

Account Number: [redacted]
Statement Period: 06/01/18 - 06/30/18

Income Activity

	Date	Income Cash	Principal Cash
Skagit Cnty Wash Sch Dist No 1 GO Bds 2011b Taxable 4.013% Dtd 06/01/2011 Due 12/01/2019 Non-Callable Int To 06/01/18 on 50,000	06/01/18		1,003.25
Total Interest Income		**$ 0.00**	**$ 6,777.24**
Total Income		**$ 0.00**	**$ 6,777.24**

Disbursement Activity

	Date	Income Cash	Principal Cash
Fees/Expenses			
Monthly Fee To 05/31/18	06/15/18		-826.32
Total Fees/Expenses		**$ 0.00**	**$ -826.32**
Total Disbursements		**$ 0.00**	**$ -826.32**

Purchase Activity

	Date	Income Cash	Principal Cash
Bank of The West Advantage Acct Purchases (4) 06/01/18 To 06/30/18	06/30/18		-6,909.14
Total Purchases		**$ 0.00**	**$ -6,909.14**

Sale Activity

	Date	Proceeds	Realized Gain/Loss
Bank of The West Advantage Acct Sales (1) 06/01/18 To 06/30/18	06/30/18	826.32	
Federal Natl Mtg Assn Gtd Passthru CTF Pool #466584 3.470% Dtd 11/01/2010 Due 11/01/2020 IPD24 Prin Pmt For May 2018	06/25/18	131.90	-9.73
Total Sales		**$ 958.22**	**$ -9.73**

WBSD - RATE STABILIZATION RESERVE

Account Number: [redacted]
Statement Period: 06/01/18 - 06/30/18

Non-Cash Activity

	Date	Cost
Arizona Brd Regents Ctfs Partn Ref Cops 2015b Taxable 1.62% Dtd 05/12/2015 Due 06/01/2019 Callable Amortization of Premium	06/01/18	-59.00
Federal Farm Cr Bks Cons Systemwide Bds 2.40% Dtd 06/17/2015 Due 06/17/2022 Non-Callable Amortization of Premium	06/15/18	-672.10
Federal Natl Mtg Assn 1.25% Dtd 05/16/2016 Due 05/06/2021 Non-Callable Accretion of Discount	06/29/18	38.36
Federal Natl Mtg Assn 1.25% Dtd 08/19/2016 Due 08/17/2021 Non-Callable Accretion of Discount	06/29/18	44.30
Federal Natl Mtg Assn 1.375% Dtd 10/07/2016 Due 10/07/2021 Non-Callable Accretion of Discount	06/29/18	52.21
Skagit Cnty Wash Sch Dist No 1 GO Bds 2011b Taxable 4.013% Dtd 06/01/2011 Due 12/01/2019 Non-Callable Amortization of Premium	06/01/18	-660.50
Total Non-Cash Transactions		**$ -1,256.73**

SECURITY PRICES CONTAINED IN THIS STATEMENT ARE OBTAINED FROM THE MOST RELIABLE SOURCES AVAILABLE BUT ARE NOT GUARANTEED BY BANK OF THE WEST. QUOTED PRICES MAY NOT EQUAL ACTUAL PRICES BECAUSE OF SECURITY SIZE, MARKET PRICE, TERM AND DEMAND.

BANK OF THE WEST
BNP PARIBAS
WEALTH MANAGEMENT

Electronic Funds Transfers

Preauthorized Transfers:
You may request an electronic fund transfer (EFT), such as an ACH transfer from or deposit to your account, by contacting your account Administrator. You may also preauthorize periodic EFTs by contacting your account Administrator. If you would like to know whether a preauthorized EFT has occurred, please contact your account Administrator at the phone number listed on the first page of your statement, or call 1-877-232-7321 (TTY 866-827-6167) between the hours of 8:00 A.M. to 5:00 P.M. Pacific Standard Time.

Error Resolution Notice:
If you think a statement or receipt is wrong or if you need more information about an EFT listed on a statement or receipt, telephone us at 1-877-232-7321 (TTY 866-827-6167) between the hours of 8:00 A.M. to 5:00 P.M. Pacific Standard Time, write to us at Bank of the West, 13300 Crossroads Parkway North, City of Industry, CA 91746, or e-mail us at WMGGIFSOperations@bankofthewest.com as soon as possible. We must hear from you no later than 60 days after we sent the FIRST statement on which the problem or error appeared.

1. Tell us your name and account number (if any).
2. Tell us the dollar amount of the suspected error.
3. Describe the error or the transfer you are unsure about, and explain as clearly as you can why you believe it is an error or why you need more information.

If you contact us verbally, we may require that you send us your complaint or question in writing within 10 business days. We will investigate your complaint and will correct any error promptly. If we take more than 10 business days to do this, we will credit your account for the amount you think is in error, so that you will have the use of the money during the time it takes us to complete our investigation.

BANK OF THE WEST
BNP PARIBAS
WEALTH MANAGEMENT

WBSD - RECYCLED WATER SRF RESERVE

Account Number: [redacted]
Statement Period: 06/01/18 - 06/30/18

WEST BAY SANITARY DISTRICT
RECYCLED WATER SRF RESERVE
500 LAUREL STREET
MENLO PARK CA 94025

Fiduciary
Chuen Ying Lee
(408) 645-3234
Portfolio
Michael D. Smith
(408) 490-2079

Asset Allocation

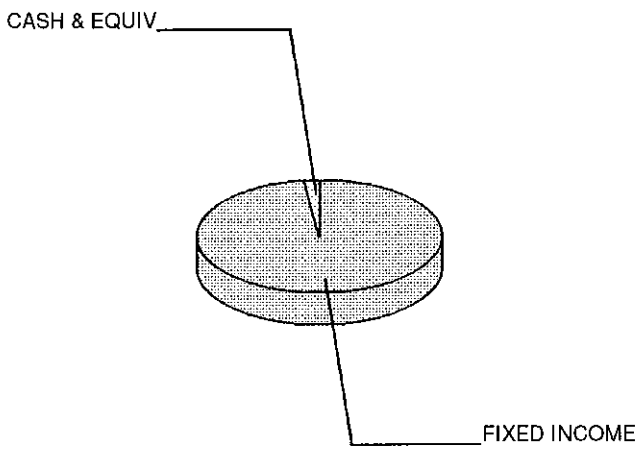

Asset Valuation

Description	Market Value	% of Account
Cash & Equiv	13,848.27	1.7%
Fixed Income	793,501.60	98.3%
Total Portfolio	**$ 807,349.87**	**100.0%**
Accrued Income	2,862.48	
Total Valuation	**$ 810,212.35**	

Market Reconcilement

	Current Period	Year To Date
Beginning Market Value	$ 809,612.95	$ 0.00
Income		
Interest	3,516.55	5,060.01
Purchased Income	0.00	-1,733.12
Additions	0.00	806,280.04
Disbursements	-120.26	-359.25
Realized Gains/(Losses)	0.00	0.00
Change In Accrued Income	-1,787.33	2,862.48
Change In Market Appreciation/(Depreciation)	-838.38	-1,887.89
Non-Cash Asset Changes	-171.18	-9.92
Ending Market Value	$ 810,212.35	$ 810,212.35

WBSD - RECYCLED WATER SRF RESERVE

Account Number: [redacted]
Statement Period: 06/01/18 - 06/30/18

Asset Position As of 06/30/18

Asset Description	Units	Market Value Cost	Est. Annual Income Accruals	Current Yield
Cash Equivalents				
Bank of The West Advantage Acct	13,848.270	13,848.27 13,848.27	242.00 15.42	1.75%
Total Cash Equivalents		**$ 13,848.27** **$ 13,848.27**	**242.00** **15.42**	**1.75%**
Fixed Income				
Federal Home Loan Bks Cons Bds Step Cpn Dtd 03/29/2018 Due 03/29/2022 Callable	200,000.000	199,924.00 200,000.00	4,500.00 22.22	2.25%
Federal Farm Cr Bks Cons Systemwide Bds 2.84% Dtd 03/20/2018 Due 09/20/2021 Callable	100,000.000	99,851.00 100,000.00	2,840.00 796.78	2.84%
Federal Farm Cr Bks Cons Systemwide Bds 2.71% Dtd 03/29/2018 Due 03/29/2021 Callable	80,000.000	79,885.60 80,000.00	2,168.00 554.04	2.71%
Federal Farm Cr Bks Cons Systemwide Bds 3.00% Dtd 03/29/2018 Due 06/29/2022 Callable	100,000.000	100,001.00 100,000.00	3,000.00 16.66	3.00%
Federal Farm Cr Bks Cons Systemwide Bds 3.65% Dtd 12/21/2010 Due 12/21/2020 Non-Callable	96,000.000	98,251.20 98,532.48	3,504.00 97.33	3.57%
Federal Home Ln Mtg Corp 3.00% Dtd 02/28/2018 Due 02/24/2023 Callable	60,000.000	59,817.00 59,988.00	1,800.00 615.00	3.01%
Federal Home Ln Mtg Corp 2.70% Dtd 03/26/2018 Due 03/26/2021 Callable	60,000.000	59,747.40 59,925.00	1,620.00 427.50	2.71%
Federal Natl Mtg Assn 1.55% Dtd 10/28/2016 Due 10/28/2021 Callable	80,000.000	76,269.60 77,153.64	1,240.00 216.99	1.63%
US Treasury Note 2.00% Dtd 09/30/2013 Due 09/30/2020	20,000.000	19,754.80 19,790.37	400.00 100.54	2.02%
Total Fixed Income		**$ 793,501.60** **$ 795,389.49**	**21,072.00** **2,847.06**	**2.66%**

BANK OF THE WEST
BNP PARIBAS
WEALTH MANAGEMENT

WBSD: RECYCLED WATER SRF RESERVE

Account Number: [redacted]
Statement Period: 06/01/18 - 06/30/18

Asset Position As of 06/30/18

Asset Description	Units	Market Value Cost	Est. Annual Income Accruals	Current Yield
Cash				
Principal Cash		0.00 0.00	0.00	0.00%
Income Cash		0.00 0.00	0.00	0.00%
Total Cash		**$ 0.00** **$ 0.00**	**0.00** **0.00**	**0.00%**
Total Market Value		**$ 807,349.87** **$ 809,237.76**	**21,314.00** **2,862.48**	**2.64%**
Total Market Value Plus Accruals		**$ 810,212.35**		

Income Activity

	Date	Income Cash	Principal Cash
Interest Income			
Bank of The West Advantage Acct Int To 05/31/18	06/01/18		14.55
Federal Home Loan Bks Cons Bds Step Cpn Dtd 03/29/2018 Due 03/29/2022 Callable Int 03/29/18 To 06/29/18 on 200000	06/29/18		1,000.00
Federal Farm Cr Bks Cons Systemwide Bds 3.00% Dtd 03/29/2018 Due 06/29/2022 Callable Int 03/29/18 To 06/29/18 on 100000	06/29/18		750.00
Federal Farm Cr Bks Cons Systemwide Bds 3.65% Dtd 12/21/2010 Due 12/21/2020 Non-Callable Int To 06/21/18 on 96,000	06/21/18		1,752.00
Total Interest Income		**$ 0.00**	**$ 3,516.55**
Total Income		**$ 0.00**	**$ 3,516.55**

BANK OF THE WEST
BNP PARIBAS
WEALTH MANAGEMENT

WBSD - RECYCLED WATER SRF RESERVE

Account Number: [redacted]
Statement Period: 06/01/18 - 06/30/18

Disbursement Activity

	Date	Income Cash	Principal Cash
Fees/Expenses			
Monthly Fee To 05/31/18	06/15/18		-120.26
Total Fees/Expenses		**$ 0.00**	**$ -120.26**
Total Disbursements		**$ 0.00**	**$ -120.26**

Purchase Activity

	Date	Income Cash	Principal Cash
Bank of The West Advantage Acct Purchases (3) 06/01/18 To 06/30/18	06/30/18		-3,516.55
Total Purchases		**$ 0.00**	**$ -3,516.55**

Sale Activity

	Date	Proceeds	Realized Gain/Loss
Bank of The West Advantage Acct Sales (1) 06/01/18 To 06/30/18	06/30/18	120.26	
Total Sales		**$ 120.26**	**$ 0.00**

Non-Cash Activity

	Date	Cost
Federal Farm Cr Bks Cons Systemwide Bds 3.65% Dtd 12/21/2010 Due 12/21/2020 Non-Callable Amortization of Premium	06/21/18	-242.45
Federal Natl Mtg Assn 1.55% Dtd 10/28/2016 Due 10/28/2021 Callable Accretion of Discount	06/29/18	71.27
Total Non-Cash Transactions		**$ -171.18**

SECURITY PRICES CONTAINED IN THIS STATEMENT ARE OBTAINED FROM THE MOST RELIABLE SOURCES AVAILABLE BUT ARE NOT GUARANTEED BY BANK OF THE WEST. QUOTED PRICES MAY NOT EQUAL ACTUAL PRICES BECAUSE OF SECURITY SIZE, MARKET PRICE, TERM AND DEMAND.

BETTY T. YEE

California State Controller

LOCAL AGENCY INVESTMENT FUND
REMITTANCE ADVICE

Agency Name		WEST BAY SANITARY DISTRICT
Account Number		70-41-004

As of 07/13/2018, your Local Agency Investment Fund account has been directly credited with the interest earned on your deposits for the quarter ending 06/30/2018.

Earnings Ratio		.00005216919081336
Interest Rate		1.90%
Dollar Day Total	$	2,059,653,119.15
Quarter End Principal Balance	$	24,531,153.09
Quarterly Interest Earned	$	107,450.44

JOHN CHIANG
TREASURER
STATE OF CALIFORNIA

PMIA Performance Report

Date	Daily Yield*	Quarter to Date Yield	Average Maturity (in days)
06/11/18	1.83	1.73	188
06/12/18	1.82	1.73	187
06/13/18	1.83	1.73	184
06/14/18	1.85	1.73	184
06/15/18	1.86	1.73	184
06/16/18	1.86	1.73	184
06/17/18	1.86	1.74	184
06/18/18	1.86	1.74	181
06/19/18	1.87	1.74	179
06/20/18	1.87	1.74	178
06/21/18	1.89	1.74	183
06/22/18	1.89	1.75	186
06/23/18	1.89	1.75	186
06/24/18	1.89	1.75	186
06/25/18	1.89	1.75	184
06/26/18	1.89	1.75	183
06/27/18	1.90	1.75	181
06/28/18	1.90	1.76	183
06/29/18	1.92	1.76	194
06/30/18	1.92	1.76	193
07/01/18	1.92	1.92	193
07/02/18	1.93	1.92	196
07/03/18	1.93	1.92	195
07/04/18	1.93	1.92	195
07/05/18	1.93	1.93	194
07/06/18	1.93	1.93	193
07/07/18	1.93	1.93	193
07/08/18	1.93	1.93	193
07/09/18	1.93	1.93	191
07/10/18	1.93	1.93	192
07/11/18	1.93	1.93	191

*Daily yield does not reflect capital gains or losses

View Prior Month Daily Rates

LAIF Performance Report

Quarter Ending 03/31/18

Apportionment Rate:	1.51%
Earnings Ratio:	0.00004135534904993
Fair Value Factor:	0.997538001
Daily:	1.59%
Quarter to Date:	1.43%
Average Life:	183

PMIA Average Monthly Effective Yields

June 2018	1.854
May 2018	1.755
Apr 2018	1.661

Pooled Money Investment Account Portfolio Composition 06/30/18 $88.8 billion

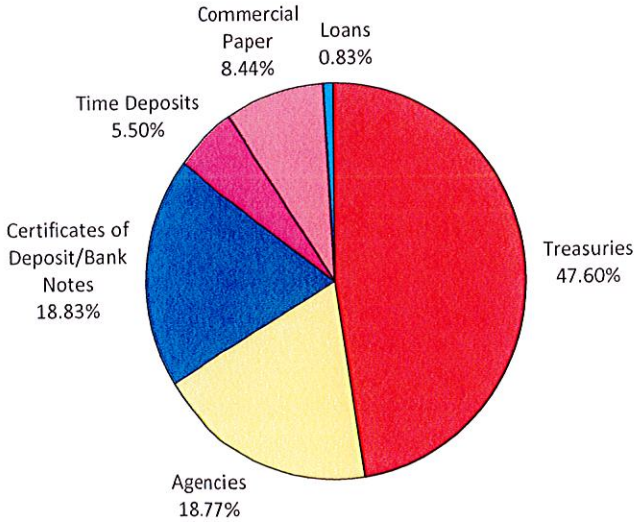

Based on data available as of 7/11/2018

PUBLIC AGENCY RETIREMENT SERVICES | PARS

WEST BAY SANITARY DISTRICT
PARS Post-Employment Benefits Trust

Received
JUL 18 2018
West Bay Sanitary District

Account Report for the Period
7/1/2017 to 6/30/2018

Phil Scott
District Manager
West Bay Sanitary District
500 Laurel Street
Menlo Park, CA 94025

Account Summary

Source	Beginning Balance as of 7/1/2017	Contributions	Earnings	Expenses	Distributions	Transfers	Ending Balance as of 6/30/2018
OPEB	$235,234.14	$0.00	$12,699.12	$609.77	$0.00	$0.00	$247,323.49
Totals	**$235,234.14**	**$0.00**	**$12,699.12**	**$609.77**	**$0.00**	**$0.00**	**$247,323.49**

Investment Selection

Source	
OPEB	**Moderate Index PLUS**

Investment Objective

Source	
OPEB	The dual goals of the Moderate Strategy are growth of principal and income. It is expected that dividend and interest income will comprise a significant portion of total return, although growth through capital appreciation is equally important. The portfolio will be allocated between equity and fixed income investments.

Investment Return

Source	1-Month	3-Months	1-Year	Annualized Return 3-Years	5-Years	10-Years	Plan's Inception Date
OPEB	-0.03%	1.12%	5.41%	-	-	-	8/31/2016

Information as provided by US Bank, Trustee for PARS; Not FDIC Insured; No Bank Guarantee; May Lose Value

Past performance does not guarantee future results. Performance returns may not reflect the deduction of applicable fees, which could reduce returns. Information is deemed reliable but may be subject to change.
Investment Return: Annualized rate of return is the return on an investment over a period other than one year multiplied or divided to give a comparable one-year return.
Account balances are inclusive of Trust Administration, Trustee and Investment Management fees

THIS PAGE LEFT INTENTIONALLY BLANK

WEST BAY
Sanitary District

WEST BAY SANITARY DISTRICT
AGENDA ITEM 5

To: ***Board of Directors***

From: ***Sergio Ramirez, Operations Superintendent***
Phil Scott, District Manager

Subject: ***Consider Adopting Resolution to Amend and Extend the Maintenance Services Agreement Between West Bay Sanitary District And The Town Of Los Altos Hills For The Operation And Maintenance Of The Los Altos Hills Sanitary Sewer System And Authorize The District Manager To Execute the Second Amendment to the Agreement***

Background

In June of 2013 the District Manager and Vivian Housen, of VWH Associates provided the Board with an update regarding the potential of consolidating sewer services with agencies in our area and the progress of an Interagency Utility Coordination Study.

At that time the Board directed the District Manager and Ms. Housen to proceed with discussions with several agencies which could possibly lead to Interagency Maintenance Agreements as well as discussions with agencies that could possibly lead to other resource sharing arrangements including consolidation.

As a result discussions were held with the Town of Los Altos Hills (Town) just to the south of the District. The Town has approximately 56 miles of collection system pipe and does not have responsibility for the laterals. The Town is responsible for 2 publically owned pump stations.

The Town formally issued a Request for Proposals (RFP) on April 21, 2014 for which the District submitted a proposal for the Operation and Maintenance of the Los Altos Hills Sanitary System on May 27, 2014. Upon reviewing the proposals the Town decided the District could be competitive in pricing and provide superior maintenance services that would lead to the overall improvement of the performance of their collection system. On August 1, 2014 the District and the Town entered into its first interagency agreement to provide sewer system services. On June 18th 2015, the Town Council approved an amendment to the original agreement to provide these sewer system services for a three year contract period.

Since August 1, 2014 the District has been under contract with the Town and has provided responsive service consistent with the terms of the agreement. Approximately 56 miles of pipeline have been cleaned, 56 miles have been video inspected, and Sanitary Sewer Overflows have considerably declined due to the District's efforts. Two sewer pump stations have been maintained during this contract.

The Town would like to enter into another three year contract beginning August 1, 2018 to July 30, 2021 by amending the previous three year contract.

Analysis

Some of the highlights of the extended maintenance agreement between the Town and District are:

1. Maintain 2 pump stations.
2. Clean a total of 56 miles of sewer line within the three year contract in addition to their "High Frequency" pipe segment cleaning.
3. CCTV a total of 9.3 miles of sewer line each year per contract (half of the system is to be inspected within the three year contract.)
4. CCTV their "High Frequency" list to evaluate the current preventative maintenance schedules.
5. Respond to SSOs and lateral service calls to determine if main is stopped up.
6. Maintain the CMMS data in District's CMMS system and update maintenance records as maintenance is performed.
7. Provide monthly summary reports.

Another option provided is to perform root foaming to a portion of the Town's system using the District's existing root foaming contract. Actual quantity for root foaming may be adjusted based on development of a root foaming plan and additional information. All data collected from cleaning, video inspecting, root foaming, and manhole locating will be updated into the Town's CMMS system by the District.

The District's new proposal includes an overall 3 percent annual cost of living adjustment along with the following adjustments and options:

1. Unscheduled Pump Station Repairs as needed. The estimated price of $748 per incident is based on 4 labor hours per call using the Pump Supervisor and Pump Mechanic at their regular labor rate excluding materials/parts.

The proposed three year extension with the District has been reviewed by staff and the Town and the recommendation is to adopt the attached resolution authorizing the District Manager to execute an extension with Town of Los Altos Hills for providing operation and maintenance services for sanitary sewer systems, 24/7 emergency and call-out services, asset management services, manhole data collection, and root foaming. This

three year contract agreement has a not-to-exceed amount of $1.49 million. The three year extension will allow West Bay to complete another full round of cleaning and to CCTV inspect half of the Town's system. The proposed term of the amended agreement is from August 1, 2018 to July 31, 2021.

Relevance to Strategic Plan

Section 4.0 Strategic Partners and Public Affairs: Our objective is to foster beneficial relationships to accomplish the goals of the District and to insure a well-informed public regarding District business and planning. We will do this by embracing strategic ties with other organizations, working closely with regulators, developing a deliberate legislative agenda and participating in professional associations.

This agreement works to accomplish the Board of Directors Vision *"We cooperate with strategic partners to provide best quality wastewater services"* within the Strategic Plan 2014, referencing the objectives in Sections 4.2 *Interagency Maintenance Agreements* and 4.3 *Consolidation.*

Fiscal Impact

The agreement is in the amount of $1.49 million for the three year period and may have a slight positive fiscal impact. The revenue would be sufficient to support two full time employees at the fully loaded rate and recover the cost of the equipment and materials used including fuel.

Recommendation

The District Manager recommends the Board adopt the resolution to amend and extend the Maintenance Services Agreement Between West Bay Sanitary District and the Town of Los Altos Hills for the Operation and Maintenance of the Los Altos Hills Sanitary Sewer System and Authorize the District Manager to Execute the Second Amendment to the Maintenance Services Agreement on behalf of the District.

Attachment: Resolution

Proposal for Sewer Maintenance Activities by West Bay Sanitary District Years 1 through 3 (August through July 31, 2021)

Second Amendment to the Maintenance Agreement

Original Town of Los Altos Hills Agreement

Town of Los Altos Hills Staff Report to City Council

RESOLUTION NO. _____(2018)

RESOLUTION TO AMEND AND EXTEND THE MAINTENANCE SERVICES AGREEMENT BETWEEN WEST BAY SANITARY DISTRICT AND THE TOWN OF LOS ALTOS HILLS FOR THE OPERATION AND MAINTENANCE OF THE LOS ALTOS HILLS SANITARY SEWER SYSTEM AND AUTHORIZE THE DISTRICT MANAGER TO EXECUTE THE SECOND AMENDMENT TO THE AGREEMENT ON BEHALF OF THE DISTRICT

*****

WHEREAS, the West Bay Sanitary District Board has read and considered that certain Agreement ("Agreement") between the District and the Town of Los Altos Hills;

NOW, THEREFORE, the District Board of the West Bay Sanitary District, County of San Mateo, State of California, does hereby RESOLVE as follows:

Section 1. Public interest and convenience require the West Bay Sanitary District to enter the Second Amendment to the Agreement for Sanitary Sewer System Operations and Maintenance Services with a not-to-exceed amount of $1.49 million to provide preventive maintenance, emergency call-out, and asset management services over the next three years.

Section 2. The West Bay Sanitary District hereby approves the to the Agreement for Sanitary Sewer System Operations and Maintenance Services and the District Manager is hereby authorized on behalf of the District to execute the Second Amendment to the Agreement between the West Bay Sanitary District and Town of Los Altos Hills.

*****

PASSED AND ADOPTED by the District Board of the West Bay Sanitary District at a meeting thereof held on 8th day of August, 2018, by the following votes:

Ayes:

Noes:

Absent:

Abstain:

_____
President of the District Board of the
West Bay Sanitary District of San
Mateo County, State of California

Attest:

_____
Secretary of the District Board of the
West Bay Sanitary District of San Mateo
County, State of California

EXHIBIT A

Task	Description of Work to be Completed on an Annual Basis	2018 Unit Cost	Unit	Quantity per Year	8/1/18 through 7/30/19	8/1/19 through 7/30/20	8/1/20 through 7/30/21	3-Year Total
1	**Pump Station Maintenance.** West Bay will continue to maintain the Town's two pump stations following the schedule outlined in the original RFP, and will also provide 24-hour emergency response. Pump station maintenance includes wet well cleaning twice annually and degreaser application as needed.	$1,879.50	month	12	$ 22,554	$ 23,231	$ 23,928	$ 69,712
2	**Preventative Maintenance Cleaning.** West Bay will clean up to 69,023 feet of mainline pipe every year for three years. This does not include the feet of mainline pipe cleaned in the High Frequency Schedule.	$ 1.33	lf	69,023	$ 91,801	$ 94,555	$ 97,391	$ 283,746
3	**High Frequency PM Cleaning.** West Bay will clean up to 89,000 feet of mainline pipe. This is in addition to the regular Preventative Maintenance Cleaning performed each year.	$ 1.33	lf	89,000	$ 118,370	$ 121,921	$ 125,579	$ 365,870
4	**CCTV Pipeline Inspection.** West Bay will complete CCTV inspection of approximately 49,345 each year on a 6 year cycle, using NASSCO PACP standards. Defects and other collection information will be included in the CMMS.	$ 1.75	lf	49,345	$ 86,354	$ 88,944	$ 91,613	$ 266,911
5	**Response to Category 2 and 3 Sanitary Sewer Overflows.** West Bay will follow the Town's SSMP and OERP in responding to and conducting initial reporting of SSOs. The Town will serve as the LRO. The Town's SSMP will closely follow the West Bay SSMP, which requires response within 60 minutes from notification. Following the SSO, and subsequent CCTV inspection, West Bay will make recommendations as to follow-up actions, including identifying issues related to lateral connections. We consider SSO Avoidance and Response as the most critical components of our operating strategy, and are well trained to address SSOs of all sizes, at any time, as described further in the original proposal. This item proposes a "per-SSO" approach. West Bay agrees to complete SSO response at no cost to the Town if the SSO in question resulted from inadequate cleaning by West Bay up to six months prior to the SSO.	$1,639	each	3	4,917	5,065	5,216	15,198

6	**Response to Category 1 SSOs.** West Bay will provide SSO response as described in Item 5. This will include appropriate creek mitigation when necessary for first 4 hours. ($650 for every hour thereafter.) If a technical report is required an additional $1,800 charge will apply.	$2,616	each	2	5,232	5,389	5,551	16,172
7	**SSO Response for Private Laterals**. West Bay will respond to SSOs related to private laterals, including determining ownership, notifying the owner of the issue, providing the owner with the Town's SSO response plan, and entering information into CMMS.	$349	each	5	1,745	1,797	1,851	5,394
8	**CCTV Inspection Quality Control -** West Bay will randomly select two line segments per month which have been cleaned in the prior month to verify the quality of the cleaning.	$537	each	24	$ 12,888	$ 13,275	$ 13,673	$ 39,836
9	**GIS and CMMS Updates**. West Bay will continue to update the Town's GIS and CMMS files in a efficient and useful manner as determined by West Bay. The Town will continue to have limited online access to the database. West Bay will integrate new line attribute data into the maps on a monthly basis, and will update the network configuration on a quarterly basis or as-needed. This work is anticipated to include approximately 10 hours per month and no more than 120 hours per year unless authorized by the Town.	$141.00	hour	120	$ 16,920	$ 17,428	$ 17,950	$ 52,298
10	**Monthly Management Report.** West Bay will continue to provide monthly O&M reports to the Town in the format that is currently in use.	$532	month	12	$ 6,384	$ 6,576	$ 6,773	$ 19,732

Subtotal Tasks 1 through 10					**$ 354,276**	**$ 364,905**	**$ 375,852**	**$ 1,095,033**
Optional 1	**Pump Station Unscheduled Repairs.** West Bay will perform unscheduled repairs to pump stations as needed. Time and Material will be charged for this service. Pump Supervisor $106 per hour/ $136 per hour at overtime rate. Pump Station Mechanic $81 per hour/ $104 per hour at overtime rate. (Estimated price based on one 4 hour call using Pump Supervisor and Pump Mechanic at regular labor rate only excluding material/parts.) Tasks lasting more than 4 hours in duration will require approval by Town representative.	$748.00	each					

Optional 2	**Unscheduled Cleaning.** Clean up to 7,200 feet of mainline pipe. This is in addition to the regular Preventative Maintenance and High Frequency Cleaning. Unscheduled Cleaning is line cleaning required for proper CCTV inspection or upon the Town's request. This charge will not apply to CCTV if the line segment has been cleaned within 6 months.	1.33	lf					
Optional 3	**High Frequency PM CCTV Assessment:** West Bay will CCTV inspect up to 22,250 feet of pipe in order to reassess their preventative maintenance frequency. Once the CCTV inspections are performed and reassessed, it is anticipated that we will be able to reduce the amount of lines designated to the High Frequency list. This CCTV includes a cleaning if necessary.	$ 2.42	lf					
Optional 4	**High Frequency PM CCTV Assessment OVERTIME (O.T.):** West Bay will CCTV inspect up to 22,250 feet of pipe in order to reassess their preventative maintenance frequency using Overtime. Once the CCTV inspections are performed and reassessed, it is anticipated that we will be able to reduce the amount of lines designated to the High Frequency list.This CCTV includes a cleaning if necessary.	$ 2.60	lf					
Optional 5	**Pass-through contract with Duke's for root foaming.** Assumes half of the pipes within 1/3 of service area require treatment annually.	$1.04	lf					
Optional 6	**Pipe Patch Repairs.** West Bay will perform upto 12 PipePatch repairs as requested by the Town.	$ 1,538.00	each					
Optional 7	**Additional Work Rates:** RCC $123 Hr / $158 O.T., PS Super $106 hr / 136 O.T., PS Mech. $81 hr. / $104 O.T., Field Supervisor $91 hr. / $117 O.T., Maintenance Tech $81 hr. / $104 O.T., Maintenance Worker $71 hr. / $91 O.T.							
Optional 8	**Audits:** West Bay will perform a 2 year Audit of the effectiveness of the SSMP and recommend revisions, if needed, in year 2020 = $1,800. West Bay will secure consultant for an independent 5-year Audit as required by GWDR 2006-003 in year 2019 at cost plus 10% (estimated at $15,000 for 5-year audit).							

SECOND AMENDMENT TO MAINTENANCE SERVICES AGREEMENT BETWEEN THE TOWN OF LOS ALTOS HILLS AND WEST BAY SANITARY DISTRICT FOR OPERATION AND MAINTENANCE OF LOS ALTOS HILLS SANITARY SEWER SYSTEM

This amendment ("Amendment") by and between the Town of Los Altos Hills ("TOWN") and West Bay Sanitary District ("West Bay") is dated for references purposes as of August _____, 2018, with reference to the following facts:

RECITALS

WHEREAS, on August 1, 2014, TOWN and West Bay entered into an agreement entitled "Maintenance Services Agreement Between the Town of Los Altos Hills and West Bay Sanitary District for Opertaion and Maintenance of Los Altos Hills Sanitary Sewer System", ("Agreement"); and

WHEREAS, on August 1, 2015, TOWN and West Bay entered an amendment entitled "Amendment to Maintenance Services Agreement Between the Town of Los Altos Hills and West Bay Sanitary District for Opertaion and Maintenance of Los Altos Hills Sanitary Sewer System", ("First Amendment"); and

WHEREAS, both parties desire to amend the Agreement in order to modify the scope of work and to extend the term of the Agreement.

NOW THEREFORE, In consideration of the covenants, conditions and promises hereinafter contained, to be kept and performed by the parties hereto, TOWN and West Bay hereby agree that the following section of the aforesaid agreement dated August 1, 2014, as modified by the First Amendment, is amended to read as follows:

1. **Revision to Section 1 (with additions in *italics* and deletions in ~~strikethrough~~)**

1.1. Term of Services. The term of this Agreement shall begin on the Effective Date and shall end on ~~July 31, 2018~~ *July 31, 2021*, the date of completion specified in **Exhibit A**, and Contractor shall complete the work described in **Exhibit A** prior to that date, unless the term of the Agreement is otherwise terminated or extended, as provided for in Section 8. The time provided to Contractor to complete the services required by this Agreement shall not affect the Town's right to terminate the Agreement, as provided or in Section 8.

2. **Revision to the first paragraph of Section 2 (with additions in *italics* and deletions in ~~strikethrough~~)**

Section 2. COMPENSATION. Town hereby agrees to pay Contractor a sum not to exceed ~~$1,285,000 (one million two hundred and seventy-five thousand dollars)~~ *$1,489,556 (one million four hundred eight-nine thousand and five hundred and fifty-six dollars)*, notwithstanding any contrary indications that may be contained in Contractor's proposal, for services to be performed and

reimbursable costs incurred under this Agreement. In the event of a conflict between this Agreement and Contractor's proposal, attached as **Exhibit A**, regarding the amount of compensation, the Agreement shall prevail. Town shall pay Contractor for services rendered pursuant to this Agreement at the time and in the manner set forth herein. The payments specified below shall be the only payments from Town to Contractor for services rendered pursuant to this Agreement. Contractor shall submit all invoices to Town in the manner specified herein. Except as specifically authorized by Town, Contractor shall not bill Town for duplicate services performed by more than one person.

3. **Exhibit A**

Existing Exhibit A "Town of Los Altos Hills Proposal for Sewer Maintenance Activities by West Bay Sanitary District Years 1 through 3 (August 1 through July 31)" shall be replaced, in its entirety, with the attached Exhibit A.

4. **General Provisions**

A. This Amendment shall be binding upon and inure to the benefit of the parties hereto and their successors and assigns.

B. Except as modified hereby, the terms and provisions of the Agreement shall remain unmodified and in full force and effect.

C. Capitalized terms not otherwise defined herein shall have the same meaning as set forth in the Agreement.

D. In case of any conflict between any term or provision of this Amendment and any term of provision of the Agreement, the term or provision of this Amendment shall govern.

E. This Amendment shall be deemed to be made in, and construed in accordance with, the laws of the State of California. In the event suit is brought by either party hereunder, the Parties agree that venue for such action shall be vested in the state courts of California in the County of Santa Clara or in the United States District court in the Northern District of California.

F. This Amendment may be executed in one or more counterparts, each of which shall be deemed an original, but all of which when taken together shall constitute one agreement.

IN WITNESS WHEREOF, this Amendment has been executed as of the date set forth above.

WEST BAY SANITARY DISTRICT **TOWN OF LOS ALTOS HILLS**

APPROVED AS TO FORM
AND LEGALITY:

_____
District Counsel

AGREED:

_____
District Manager

APPROVED AS TO FORM
AND LEGALITY:

_____
City Attorney

AGREED:

_____
City Manager

2463185.1

MAINTENANCE SERVICES AGREEMENT BETWEEN
THE TOWN OF LOS ALTOS HILLS AND
WEST BAY SANITARY DISTRICT
FOR OPERATION AND MAINTENANCE OF LOS ALTOS HILLS SANITARY SEWER SYSTEM

THIS AGREEMENT for consulting services is made by and between the Town of Los Altos Hills ("Town") and West Bay Sanitary District ("Contractor") (together sometimes referred to as the "Parties") as of Aug 1, 2014 (the "Effective Date").

Section 1. **SERVICES**. Subject to the terms and conditions set forth in this Agreement, Contractor shall provide to Town the services described in the Scope of Work attached as **Exhibit A**, attached hereto and incorporated herein, at the time and place and in the manner specified therein. In the event of a conflict in or inconsistency between the terms of this Agreement and Exhibit A, the Agreement shall prevail.

1.1 **Term of Services.** The term of this Agreement shall begin on the Effective Date and shall end on July 31, 2015, the date of completion specified in **Exhibit A**, and Contractor shall complete the work described in **Exhibit A** prior to that date, unless the term of the Agreement is otherwise terminated or extended, as provided for in Section 8. The time provided to Contractor to complete the services required by this Agreement shall not affect the Town's right to terminate the Agreement, as provided for in Section 8.

1.2 **Standard of Performance.** Contractor shall perform all services required pursuant to this Agreement in the manner and according to the standards observed by a competent practitioner of the profession in which Contractor is engaged in the geographical area in which Contractor practices its profession.

1.3 **Assignment of Personnel.** Contractor shall assign only competent personnel to perform services pursuant to this Agreement. In the event that Town, in its sole discretion, at any time during the term of this Agreement, desires the reassignment of any such persons, Contractor shall, immediately upon receiving notice from Town of such desire of Town, reassign such person or persons.

1.4 **Time.** Contractor shall devote such time to the performance of services pursuant to this Agreement as may be reasonably necessary to meet the standard of performance provided in Section 1.1 above and to satisfy Contractor's obligations hereunder.

Section 2. **COMPENSATION.** Town hereby agrees to pay Contractor a sum not to exceed $277,048.00, notwithstanding any contrary indications that may be contained in Contractor's proposal, for services to be performed and reimbursable costs incurred under this Agreement. In the event of a conflict between this Agreement and Contractor's proposal, attached as **Exhibit A**, regarding the amount of compensation, the Agreement shall prevail. Town shall pay Contractor for services rendered pursuant to this Agreement at the time and in the manner set forth herein. The payments specified below shall be the

only payments from Town to Contractor for services rendered pursuant to this Agreement. Contractor shall submit all invoices to Town in the manner specified herein. Except as specifically authorized by Town, Contractor shall not bill Town for duplicate services performed by more than one person.

Contractor and Town acknowledge and agree that compensation paid by Town to Contractor under this Agreement is based upon Contractor's estimated costs of providing the services required hereunder, including salaries and benefits of employees and subcontractors of Contractor. Consequently, the parties further agree that compensation hereunder is intended to include the costs of contributions to any pensions and/or annuities to which Contractor and its employees, agents, and subcontractors may be eligible. Town therefore has no responsibility for such contributions beyond compensation required under this Agreement.

2.1 **Invoices.** Contractor shall submit invoices, not more often than once a month during the term of this Agreement, based on the cost for services performed and reimbursable costs incurred prior to the invoice date. Invoices shall contain the following information:

- Serial identifications of progress bills; i.e., Progress Bill No. 1 for the first invoice, etc.;
- The beginning and ending dates of the billing period;
- A Task Summary containing the original contract amount, the amount of prior billings, the total due this period, the balance available under the Agreement, and the percentage of completion;
- At Town's option, for each work item in each task, a copy of the applicable time entries or time sheets shall be submitted showing the name of the person doing the work, the hours spent by each person, a brief description of the work, and each reimbursable expense;
- The total number of hours of work performed under the Agreement by Contractor and each employee, agent, and subcontractor of Contractor performing services hereunder;
- The Contractor's signature.

2.2 **Monthly Payment.** Town shall make monthly payments, based on invoices received, for services satisfactorily performed, and for authorized reimbursable costs incurred. Town shall have 30 days from the receipt of an invoice that complies with all of the requirements above to pay Contractor.

2.3 **Final Payment.** Town shall pay the last 10% of the total sum due pursuant to this Agreement within sixty (60) days after completion of the services and submittal to Town of a final invoice, if all services required have been satisfactorily performed.

2.4 **Total Payment.** Town shall pay for the services to be rendered by Contractor pursuant to this Agreement. Town shall not pay any additional sum for any expense or cost

whatsoever incurred by Contractor in rendering services pursuant to this Agreement. Town shall make no payment for any extra, further, or additional service pursuant to this Agreement.

In no event shall Contractor submit any invoice for an amount in excess of the maximum amount of compensation provided above either for a task or for the entire Agreement, unless the Agreement is modified prior to the submission of such an invoice by a properly executed change order or amendment.

2.7 **Payment of Taxes.** Contractor is solely responsible for the payment of employment taxes incurred under this Agreement and any similar federal or state taxes.

2.8 **Payment upon Termination.** In the event that the Town or Contractor terminates this Agreement pursuant to Section 8, the Town shall compensate the Contractor for all outstanding costs and reimbursable expenses incurred for work satisfactorily completed as of the date of written notice of termination. Contractor shall maintain adequate logs and timesheets in order to verify costs incurred to that date.

2.9 **Authorization to Perform Services.** The Contractor is not authorized to perform any services or incur any costs whatsoever under the terms of this Agreement until receipt of authorization from the Contract Administrator.

Section 3. **FACILITIES AND EQUIPMENT.** Except as set forth herein, Contractor shall, at its sole cost and expense, provide all facilities and equipment that may be necessary to perform the services required by this Agreement.

Section 4. **INSURANCE REQUIREMENTS.** Before beginning any work under this Agreement, Contractor, at its own cost and expense, unless otherwise specified below, shall procure the types and amounts of insurance listed below against claims for injuries to persons or damages to property that may arise from or in connection with the performance of the work hereunder by the Contractor and its agents, representatives, employees, and subcontractors. Consistent with the following provisions, Contractor shall provide Certificates of Insurance, attached hereto and incorporated herein as **Exhibit B**, indicating that Contractor has obtained or currently maintains insurance that meets the requirements of this section and under forms of insurance satisfactory, in all respects, to the Town. Such insurance may be provided through Contractor's participation in the California Sanitation Risk Management Authority. Contractor shall maintain the insurance policies required by this section throughout the term of this Agreement. The cost of such insurance shall be included in the Contractor's bid. Contractor shall not allow any subcontractor to commence work on any subcontract until Contractor has obtained all insurance required herein for the subcontractor(s) and provided evidence thereof to Town. Verification of the required insurance shall be submitted and made part of this Agreement prior to execution.

4.1 **Workers' Compensation.** Contractor shall, at its sole cost and expense, maintain Statutory Workers' Compensation Insurance and Employer's Liability Insurance for any and all persons employed directly or indirectly by Contractor. The Statutory Workers'

Compensation Insurance and Employer's Liability Insurance shall be provided with limits of not less than ONE MILLION DOLLARS ($1,000,000.00) per accident. In the alternative, Contractor may rely on a self-insurance program to meet those requirements, but only if the program of self-insurance complies fully with the provisions of the California Labor Code. Determination of whether a self-insurance program meets the standards of the Labor Code shall be solely in the discretion of the Contract Administrator. The insurer, if insurance is provided, or the Contractor, if a program of self-insurance is provided, shall waive all rights of subrogation against the Town and its officers, officials, employees, and volunteers for loss arising from work performed under this Agreement.

4.2 Commercial General and Automobile Liability Insurance.

4.2.1 General requirements. Contractor, at its own cost and expense, shall maintain commercial general and automobile liability insurance for the term of this Agreement in an amount not less than TWO MILLION DOLLARS ($2,000,000.00) per occurrence, combined single limit coverage for risks associated with the work contemplated by this Agreement. If a Commercial General Liability Insurance or an Automobile Liability form or other form with a general aggregate limit is used, either the general aggregate limit shall apply separately to the work to be performed under this Agreement or the general aggregate limit shall be at least twice the required occurrence limit. Such coverage shall include but shall not be limited to, protection against claims arising from bodily and personal injury, including death resulting there from, and damage to property resulting from activities contemplated under this Agreement, including the use of owned and non-owned automobiles.

4.2.2 Minimum scope of coverage. Commercial general coverage shall be at least as broad as Insurance Services Office Commercial General Liability occurrence form CG 0001 or GL 0002 (most recent editions) covering comprehensive General Liability and Insurance Services Office form number GL 0404 covering Broad Form Comprehensive General Liability. Automobile coverage shall be at least as broad as Insurance Services Office Automobile Liability form CA 0001 (ed. 12/90) Code 8 and 9. No endorsement shall be attached limiting the coverage.

4.2.3 Additional requirements. Each of the following shall be included in the insurance coverage or added as a certified endorsement to the policy:

a. The insurance shall cover on an occurrence or an accident basis, and not on a claims-made basis.

b. Any failure of Contractor to comply with reporting provisions of the policy shall not affect coverage provided to Town and its officers, employees, agents, and volunteers.

4.3 **Professional Liability Insurance.**

4.3.1 **General requirements.** Contractor, at its own cost and expense, shall maintain for the period covered by this Agreement professional liability insurance for licensed professionals performing work pursuant to this Agreement in an amount not less than ONE MILLION DOLLARS ($1,000,000) covering the licensed professionals' errors and omissions. Any deductible or self-insured retention shall not exceed $150,000 per claim.

4.3.2 **Claims-made limitations.** The following provisions shall apply if the professional liability coverage is written on a claims-made form:

a. The retroactive date of the policy must be shown and must be before the date of the Agreement.

b. Insurance must be maintained and evidence of insurance must be provided for at least five years after completion of the Agreement or the work, so long as commercially available at reasonable rates.

c. If coverage is canceled or not renewed and it is not replaced with another claims-made policy form with a retroactive date that precedes the date of this Agreement, Contractor must provide extended reporting coverage for a minimum of five years after completion of the Agreement or the work. The Town shall have the right to exercise, at the Contractor's sole cost and expense, any extended reporting provisions of the policy, if the Contractor cancels or does not renew the coverage.

d. A copy of the claim reporting requirements must be submitted to the Town prior to the commencement of any work under this Agreement.

4.4 **All Policies Requirements.**

4.4.1 **Acceptability of insurers.** All insurance required by this section is to be placed with insurers with a Bests' rating of no less than A:VII.

4.4.2 **Verification of coverage.** Prior to beginning any work under this Agreement, Contractor shall furnish Town with complete certified copies of all policies, including complete certified copies of all endorsements. All copies of policies and certified endorsements shall show the signature of a person authorized by that insurer to bind coverage on its behalf.

4.4.3 **Notice of Reduction in or Cancellation of Coverage.** A certified endorsement shall be attached to all insurance obtained pursuant to this Agreement stating that coverage shall not be suspended, voided, canceled by either party, or reduced in

coverage or in limits, except after thirty (30) days' prior written notice by certified mail, return receipt requested, has been given to the Town. In the event that any coverage required by this section is reduced, limited, cancelled, or materially affected in any other manner, Contractor shall provide written notice to Town at Contractor's earliest possible opportunity and in no case later than ten (10) working days after Contractor is notified of the change in coverage.

4.4.4 **Additional insured; primary insurance.** Town and its officers, employees, agents, and volunteers shall be covered as additional insureds with respect to each of the following: liability arising out of activities performed by or on behalf of Contractor, including the insured's general supervision of Contractor; products and completed operations of Contractor, as applicable; premises owned, occupied, or used by Contractor; and automobiles owned, leased, or used by the Contractor in the course of providing services pursuant to this Agreement. The coverage shall contain no special limitations on the scope of protection afforded to Town or its officers, employees, agents, or volunteers.

A certified endorsement must be attached to all policies stating that coverage is primary insurance with respect to the Town and its officers, officials, employees and volunteers, and that no insurance or self-insurance maintained by the Town shall be called upon to contribute to a loss under the coverage.

4.4.5 **Deductibles and Self-Insured Retentions.** Contractor shall disclose to and obtain the approval of Town for the self-insured retentions and deductibles before beginning any of the services or work called for by any term of this Agreement.

During the period covered by this Agreement, only upon the prior express written authorization of Contract Administrator, Contractor may increase such deductibles or self-insured retentions with respect to Town, its officers, employees, agents, and volunteers. The Contract Administrator may condition approval of an increase in deductible or self-insured retention levels with a requirement that Contractor procure a bond, guaranteeing payment of losses and related investigations, claim administration, and defense expenses that is satisfactory in all respects to each of them.

4.4.6 **Subcontractors.** Contractor shall include all subcontractors as insureds under its policies or shall furnish separate certificates and certified endorsements for each subcontractor. All coverages for subcontractors shall be subject to all of the requirements stated herein.

4.4.7 **Variation.** The Town may approve a variation in the foregoing insurance requirements, upon a determination that the coverage, scope, limits, and forms of such insurance are either not commercially available, or that the Town's interests are otherwise fully protected.

4.5 **Remedies.** In addition to any other remedies Town may have if Contractor fails to provide or maintain any insurance policies or policy endorsements to the extent and within the time herein required, Town may, at its sole option exercise any of the following remedies, which are alternatives to other remedies Town may have and are not the exclusive remedy for Contractor's breach:

- Obtain such insurance and deduct and retain the amount of the premiums for such insurance from any sums due under the Agreement;
- Order Contractor to stop work under this Agreement or withhold any payment that becomes due to Contractor hereunder, or both stop work and withhold any payment, until Contractor demonstrates compliance with the requirements hereof; and/or
- Terminate this Agreement.

Section 5. INDEMNIFICATION AND CONTRACTOR'S RESPONSIBILITIES. Contractor shall indemnify, defend with counsel selected by the Town, and hold harmless the Town and its officials, officers, employees, agents, and volunteers from and against any and all losses, liability, claims, suits, actions, damages, and causes of action arising out of any personal injury, bodily injury, loss of life, or damage to property, or any violation of any federal, state, or municipal law or ordinance, to the extent caused, in whole or in part, by the willful misconduct or negligent acts or omissions of Contractor or its employees, subcontractors, or agents, by acts for which they could be held strictly liable, or by the quality or character of their work. The foregoing obligation of Contractor shall not apply when (1) the injury, loss of life, damage to property, or violation of law arises wholly from the gross negligence or willful misconduct of the Town or its officers, employees, agents, or volunteers and (2) the actions of Contractor or its employees, subcontractor, or agents have contributed in no part to the injury, loss of life, damage to property, or violation of law. It is understood that the duty of Contractor to indemnify and hold harmless includes the duty to defend as set forth in Section 2778 of the California Civil Code. Acceptance by Town of insurance certificates and endorsements required under this Agreement does not relieve Contractor from liability under this indemnification and hold harmless clause. This indemnification and hold harmless clause shall apply to any damages or claims for damages whether or not such insurance policies shall have been determined to apply. By execution of this Agreement, Contractor acknowledges and agrees to the provisions of this Section and that it is a material element of consideration.

In the event that Contractor or any employee, agent, or subcontractor of Contractor providing services under this Agreement is determined by a court of competent jurisdiction or the California Public Employees Retirement System (PERS) to be eligible for enrollment in PERS as an employee of Town, Contractor shall indemnify, defend, and hold harmless Town for the payment of any employee and/or employer contributions for PERS benefits on behalf of Contractor or its employees, agents, or subcontractors, as well as for the payment of any penalties and interest on such contributions, which would otherwise be the responsibility of Town.

Notwithstanding the foregoing, CONTRACTOR shall not be required by this Section 5 to indemnify, hold harmless or defend the TOWN for liability, including but not limited to fines or civil penalties imposed by regulatory authorities or non-governmental entities pursuant to the Clean Water Act or state law, that may arise if any part of the System fails, overflows, or otherwise causes damages or costs, provided that the failure, overflow, or other cause of the damage was not proximately caused by the Contractor's negligence in the performance of work specified by this Agreement. Examples of such failure, overflow or other problem include, but are not limited to: blockages that are proximately caused by facilities that are prone to severe root intrusion or blockages because the facilities are beyond their useful life (as determined by video inspection with high PACP ratings) or are improperly installed or damaged; blockages proximately caused by construction activities, earthquakes or settling; blockages caused by FOG build-up or other obstructions; provided that such blockages could not reasonably be anticipated in a particular segment based on historic data; or blockages caused by acts of vandalism or negligence of any third party. TOWN agrees to hold CONTRACTOR free and harmless and to indemnify CONTRACTOR and its officers, officials, employees and agents from all such claims, demands, damages, liabilities, losses and costs of whatever nature arising from, connected with, or related to such system failures, overflows, or other events, (except for any overflow that occurs on a particular sewer segment/facility where the CONTRACTOR has performed maintenance within 90 days prior to the overflow and is caused by a condition that CONTRACTOR reasonably should have discovered during the maintenance activity, and either: (1) CONTRACTOR has not made notification to TOWN as to the condition; or (2) the cause of the overflow would be reasonably expected to be eliminated by said maintenance) or that arise from or are proximately caused by TOWN's performance of work which is not included within the scope of this Agreement.

Section 6. STATUS OF CONTRACTOR.

6.1 **Independent Contractor.** At all times during the term of this Agreement, Contractor shall be an independent contractor and shall not be an employee of Town. Town shall have the right to control Contractor only insofar as the results of Contractor's services rendered pursuant to this Agreement and assignment of personnel pursuant to Subparagraph 1.3; however, otherwise Town shall not have the right to control the means by which Contractor accomplishes services rendered pursuant to this Agreement. Notwithstanding any other City, state, or federal policy, rule, regulation, law, or ordinance to the contrary, Contractor and any of its employees, agents, and subcontractors providing services under this Agreement shall not qualify for or become entitled to, and hereby agree to waive any and all claims to, any compensation, benefit, or any incident of employment by Town, including but not limited to eligibility to enroll in the California Public Employees Retirement System (PERS) as an employee of Town and entitlement to any contribution to be paid by Town for employer contributions and/or employee contributions for PERS benefits.

6.2 **Contractor No Agent.** Except as Town may specify in writing, Contractor shall have no authority, express or implied, to act on behalf of Town in any capacity whatsoever as an agent. Contractor shall have no authority, express or implied, pursuant to this Agreement to bind Town to any obligation whatsoever.

Section 7. LEGAL REQUIREMENTS.

7.1 **Governing Law.** The laws of the State of California shall govern this Agreement.

7.2 **Compliance with Applicable Laws.** Contractor and any subcontractors shall comply with all laws applicable to the performance of the work hereunder.

7.3 **Other Governmental Regulations.** To the extent that this Agreement may be funded by fiscal assistance from another governmental entity, Contractor and any subcontractors shall comply with all applicable rules and regulations to which Town is bound by the terms of such fiscal assistance program.

7.4 **Licenses and Permits.** Contractor represents and warrants to Town that Contractor and its employees, agents, and any subcontractors have all licenses, permits, qualifications, and approvals of what-so-ever nature that are legally required to practice their respective professions. Contractor represents and warrants to Town that Contractor and its employees, agents, any subcontractors shall, at their sole cost and expense, keep in effect at all times during the term of this Agreement any licenses, permits, and approvals that are legally required to practice their respective professions. In addition to the foregoing, Contractor and any subcontractors shall obtain and maintain during the term of this Agreement valid Business Licenses from Town.

7.5 **Nondiscrimination and Equal Opportunity.** Contractor shall not discriminate, on the basis of a person's race, religion, color, national origin, age, physical or mental handicap or disability, medical condition, marital status, sex, or sexual orientation, against any employee, applicant for employment, subcontractor, bidder for a subcontract, or participant in, recipient of, or applicant for any services or programs provided by Contractor under this Agreement. Contractor shall comply with all applicable federal, state, and local laws, policies, rules, and requirements related to equal opportunity and nondiscrimination in employment, contracting, and the provision of any services that are the subject of this Agreement, including but not limited to the satisfaction of any positive obligations required of Contractor thereby.

Contractor shall include the provisions of this Subsection in any subcontract approved by the Contract Administrator or this Agreement.

Section 8. TERMINATION AND MODIFICATION.

8.1 **Termination.** Town may cancel this Agreement at any time and without cause upon written notification to Contractor.

Contractor may cancel this Agreement upon ninety (90) days written notice to Town and shall include in such notice the reasons for cancellation.

In the event of termination, Contractor shall be entitled to compensation for services performed to the effective date of termination; Town, however, may condition payment of such compensation upon Contractor delivering to Town any or all documents, photographs, computer software, video and audio tapes, and other materials provided to Contractor or prepared by or for Contractor or the Town in connection with this Agreement.

8.2 **Extension.** Town reserves the right not to extend this Agreement. However, upon the mutual agreement of Town and Contractor, Town may extend the end date of this Agreement beyond that provided for in Subsection 1.1. Any such extension shall require a written amendment to this Agreement, as provided for herein. Contractor's compensation during such extension shall be determined by mutual agreement of Town and Contractor at the time of extension.

8.3 **Amendments.** The parties may amend this Agreement only by a writing signed by all the parties.

8.4 **Assignment and Subcontracting.** Town and Contractor recognize and agree that this Agreement contemplates personal performance by Contractor and is based upon a determination of Contractor's unique personal competence, experience, and specialized personal knowledge. Moreover, a substantial inducement to Town for entering into this Agreement was and is the professional reputation and competence of Contractor. Contractor may not assign this Agreement or any interest therein without the prior written approval of the Contract Administrator. Contractor shall not subcontract any portion of the performance contemplated and provided for herein, other than to the subcontractors noted in the proposal, without prior written approval of the Contract Administrator.

8.5 **Survival.** All obligations arising prior to the termination of this Agreement and all provisions of this Agreement allocating liability between Town and Contractor shall survive the termination of this Agreement.

8.6 **Options upon Breach by Contractor.** If Contractor materially breaches any of the terms of this Agreement, Town's remedies shall include, but not be limited to, the following:

8.6.1 Immediately terminate the Agreement;

8.6.2 Retain the plans, specifications, drawings, reports, design documents, and any other work product prepared by Contractor pursuant to this Agreement;

8.6.3 Retain a different Contractor to complete the work described in **Exhibit A** not finished by Contractor; and/or

8.6.4 Charge Contractor the difference between the cost to complete the work described in **Exhibit A** that is unfinished at the time of breach and the amount that

Town would have paid Contractor pursuant to Section 2 if Contractor had completed the work.

Section 9. KEEPING AND STATUS OF RECORDS.

9.1 **Records Created as Part of Contractor's Performance.** All reports, data, maps, models, charts, studies, surveys, photographs, memoranda, plans, studies, specifications, records, files, or any other documents or materials, in electronic or any other form, that Contractor prepares or obtains pursuant to this Agreement and that relate to the matters covered hereunder shall be the property of the Town. Contractor hereby agrees to deliver those documents to the Town upon termination of the Agreement. It is understood and agreed that the documents and other materials, including but not limited to those described above, prepared pursuant to this Agreement are prepared specifically for the Town and are not necessarily suitable for any future or other use. Town and Contractor agree that, until final approval by Town, all data, plans, specifications, reports and other documents are confidential and will not be released to third parties without prior written consent of both parties unless required by law.

9.2 **Contractor's Books and Records.** Contractor shall maintain any and all ledgers, books of account, invoices, vouchers, canceled checks, and other records or documents evidencing or relating to charges for services or expenditures and disbursements charged to the Town under this Agreement for a minimum of three (3) years, or for any longer period required by law, from the date of final payment to the Contractor to this Agreement.

9.3 **Inspection and Audit of Records.** Any records or documents that Section 9.2 of this Agreement requires Contractor to maintain shall be made available for inspection, audit, and/or copying at any time during regular business hours, upon oral or written request of the Town. Under California Government Code Section 8546.7, if the amount of public funds expended under this Agreement exceeds TEN THOUSAND DOLLARS ($10,000.00), the Agreement shall be subject to the examination and audit of the State Auditor, at the request of Town or as part of any audit of the Town, for a period of three (3) years after final payment under the Agreement.

9.4 **Records Submitted in Response to an Invitation to Bid or Request for Proposals**. All responses to a Request for Proposals (RFP) or invitation to bid issued by the Town become the exclusive property of the Town. At such time as the Town selects a bid, all proposals received become a matter of public record, and shall be regarded as public records, with the exception of those elements in each proposal that are defined by Contractor and plainly marked as "Business Secret" or Trade Secret." Any proposal that contains language purporting to render all or significant portions of the proposal "Confidential," "Trade Secret," or "Proprietary," shall be regarded as non-responsive.

The Town shall not be liable or in any way responsible for the disclosure of any such proposal or portions thereof, if Contractor has not plainly marked it as a "Trade Secret" or "Business Secret" or if disclosure is required under the Public Records Act.

Although the California Public Records Act recognizes that certain confidential trade secret information may be protected from disclosure, the Town may not be in a position to establish that the information that a prospective bidder submits is a trade secret. If a request is made for information marked "Trade Secret" or "Business Secret," and the requester takes legal action seeking release of the materials it believes does not constitute trade secret information, by submitting a proposal, Contractor agrees to indemnify, defend and hold harmless the Town, its agents and employees, from any judgment, fines, penalties, and award of attorneys fees awarded against the Town in favor of the party requesting the information, and any and all costs connected with that defense. This obligation to indemnify survives the Town's award of the contract. In submitting a proposal, Contractor agrees that this indemnification survives as long as the trade secret information is in the Town's possession, which includes a minimum retention period for such documents.

Section 10 MISCELLANEOUS PROVISIONS.

10.1 **Attorneys' Fees.** If a party to this Agreement brings any action, including an action for declaratory relief, to enforce or interpret the provision of this Agreement, the prevailing party shall be entitled to reasonable attorneys' fees in addition to any other relief to which that party may be entitled. The court may set such fees in the same action or in a separate action brought for that purpose.

10.2 **Venue.** In the event that either party brings any action against the other under this Agreement, the parties agree that trial of such action shall be vested exclusively in the state courts of California in the County of Santa Clara or in the United States District Court for the Northern District of California.

10.3 **Severability.** If a court of competent jurisdiction finds or rules that any provision of this Agreement is invalid, void, or unenforceable, the provisions of this Agreement not so adjudged shall remain in full force and effect. The invalidity in whole or in part of any provision of this Agreement shall not void or affect the validity of any other provision of this Agreement.

10.4 **No Implied Waiver of Breach.** The waiver of any breach of a specific provision of this Agreement does not constitute a waiver of any other breach of that term or any other term of this Agreement.

10.5 **Successors and Assigns.** The provisions of this Agreement shall inure to the benefit of and shall apply to and bind the successors and assigns of the parties.

10.6 **Use of Recycled Products.** Contractor shall prepare and submit all reports, written studies and other printed material on recycled paper to the extent it is available at equal or less cost than virgin paper.

10.7 **Conflict of Interest.** Contractor may serve other clients, but none whose activities within the corporate limits of Town or whose business, regardless of location, would place Contractor in a "conflict of interest," as that term is defined in the Political Reform Act, codified at California Government Code Section 81000 *et seq.*

Contractor shall not employ any Town official in the work performed pursuant to this Agreement. No officer or employee of Town shall have any financial interest in this Agreement that would violate California Government Code Sections 1090 *et seq.*

Contractor hereby warrants that it is not now, nor has it been in the previous twelve (12) months, an employee, agent, appointee, or official of the Town. If Contractor was an employee, agent, appointee, or official of the Town in the previous twelve months, Contractor warrants that it did not participate in any manner in the forming of this Agreement. Contractor understands that, if this Agreement is made in violation of Government Code §1090 *et.seq.*, the entire Agreement is void and Contractor will not be entitled to any compensation for services performed pursuant to this Agreement, including reimbursement of expenses, and Contractor will be required to reimburse the Town for any sums paid to the Contractor. Contractor understands that, in addition to the foregoing, it may be subject to criminal prosecution for a violation of Government Code§ 1090 and, if applicable, will be disqualified from holding public office in the State of California.

10.8 **Solicitation.** Contractor agrees not to solicit business at any meeting, focus group, or interview related to this Agreement, either orally or through any written materials.

10.9 **Contract Administration.** This Agreement shall be administered by the Town's Public Works Director ("Contract Administrator"). All correspondence shall be directed to or through the Contract Administrator or his or her designee.

10.10 **Notices.** Any written notice to Contractor shall be sent to:

District Manager, West Bay Sanitary District
Phil Scott
500 Laurel Street
Menlo Park, CA 94025

Any written notice to Town shall be sent to:

Public Works Director, Town of Los Altos Hills
Richard Chiu Jr.
26379 Fremont Road
Los Altos Hills, CA 94022

10.11 **Integration.** This Agreement, including the scope of work attached hereto and incorporated herein as **Exhibit A**, represents the entire and integrated agreement between Town and Contractor and supersedes all prior negotiations, representations, or agreements, either written or oral.

10.12 **Counterparts.** This Agreement may be executed in multiple counterparts, each of which shall be an original and all of which together shall constitute one agreement.

The Parties have executed this Agreement as of the Effective Date.

TOWN OF LOS ALTOS HILLS

Carl Cahill, City Manager

WEST BAY SANITARY DISTRICT

Phil Scott, District Manager

Attest:

City Clerk

Approved as to Form:

District Counsel

Approved as to Form:

City Attorney

207532_1
2299788.1

Request for Proposals

2014 Sanitary Sewer System Operations and Maintenance

Public Works Department
Town of Los Altos Hills
26379 Freemont Road
Los Altos Hills, CA 94022

April 21, 2014

The Town of Los Altos Hills is accepting proposals to select a qualified firm to provide Sanitary Sewer System Operation and Maintenance for the municipal wastewater collection system.

The intent of this request for proposals is to obtain a qualified firm who has the ability to develop and implement a comprehensive and effective operation and maintenance schedule using a map based Computerized Maintenance Management System (CMMS), apply adequate cleaning technique, provide preventive measures, respond to SSO and other emergency situations promptly, inspect the collection system via CCTV, provide and maintain the CMMS system, recommend repairs to pump stations and collection systems, appropriately manage/maintain the entire sanitary sewer collection system. The CMMS software to be provided is intended to aid Public Works personnel in furthering their goal of providing prioritized, responsive, professional, and cost-effective municipal services to the residents of Los Altos Hills. All work included in this proposal shall be subject to prevailing wages. All questions regarding this Request for Proposals (RFP) shall be directed to Richard Chiu, Public Works Director, at (650) 947-2516

Proposals shall be submitted by firms that have a capable and demonstrable background in the type of work described in, "Detailed Description of Work," of this notice. In addition, all interested firms shall have sufficient, readily available resources in the form of trained personnel, support services, specialized services and financial resources to carry out the work without delay or shortcomings. The proposals shall be submitted to the City Clerk, Town of Los Altos Hills, 26379 Freemont Road, Los Altos Hills, California, 94022, no later than:

2:00 p.m. on May 20, 2014

Each proposer shall submit three (3) bound sets of the proposal in accordance with, "PROPOSAL REQUIREMENTS." This Request for Proposals and other related documents are available on the Town's website.

Exhibit A

Subject: **Request for Proposal (RFP) – 2014 Sanitary Sewer System Operations and Maintenance for the Town of Los Altos Hills**

The Town of Los Altos Hills (Town) is accepting proposals from qualified firms to provide Sanitary Sewer System Operation and Maintenance for the municipal wastewater collection system as described below.

Background

The Town of Los Altos Hills (Town) covers an 8.4 square mile area in Santa Clara County adjacent to the City of Los Altos and the City of Palo Alto. The Town is primarily residential, with a population of approximately 8,300 and a minimum parcel size of one acre. Approximately half of the Town's residents are served by the sanitary sewer system and the remainder utilizes septic tanks.

The Town owns and operates the sanitary sewer collection system consisting of approximately 296,070 feet (±56 miles) of pipes. Pipe diameters range from 4 to 12 inches, with approximately 77% of the system being vitrified clay pipe and 74% of the system being 6 inches in diameter. There are approximately 1,700 manholes and cleanouts including two lift stations. As shown in Attachment No. A1 (Town's sewer maps-2), sewer mains run under the roadway, sewer easements in the private properties, and Town's open space. The collected sewage is conveyed to the Palo Alto Regional Water Quality Control Plant through the collection systems of the City of Palo Alto and the City of Los Altos.

The Town is responsible for maintaining sewer mains but the maintenance of sewer lateral between building and the main shall be private property owner's responsibility.

The Town is responsible to provide reliable sanitary sewer system for the community and together with contractor's expertise, it is expected that the contractor will not only maintain the service level of the sewer system but also limit the number of sanitary sewer overflows. It is anticipated that the contractor will take complete responsibility for maintenance of the sanitary sewer collection system (SSCS). The successful bidder will be incentivized to perform in an effective and efficient manner, and such performance should permit a greater level of profitability.

Town reserves the right not to extend this Agreement. However, upon the mutual agreement of Town and Contractor, Town may extend the end date of this Agreement beyond that provided for in Subsection 1.1. Any such extension shall require a written amendment to this Agreement, as provided for herein. Contractor's compensation during such extension shall be determined by CPI index at the time of extension.

General Scope of Work

The intent of this maintenance program is to obtain a qualified contractor who has the ability to develop and implement a comprehensive and effective operation and maintenance schedule using a map based Computerized Maintenance Management System (CMMS), apply adequate cleaning technique, provide preventive measures, respond to SSO and other emergency situations promptly, inspect the collection system via CCTV using NASSCO PACP standards, maintain and update the CMMS system, recommend repairs to pump stations and collection systems, appropriately manage the entire sanitary sewer collection system, and maintain open communication with Town staff at all times. The CMMS software is intended to aid Public Works personnel in furthering their goal of providing prioritized, responsive, professional, and cost-effective municipal services to the residents of Los Altos Hills. **All work included in this proposal shall be subject to prevailing wages.**

Detail Description of Work

1. Town Owned Lift Station Maintenance at Purissima Road and O'Keefe Road (Bid Item No. 1)

   a. **Purissima Sanitary Lift Station**
   Contractor shall perform the following services as outlined below to ensure optimum performance of the various equipment including the pumps and generator:

   Services to be performed each week
   (1) Visually inspect and check the wet well levels to ensure proper automatic start/stop levels for the pumps
   (2) Check pumps for unusual noise or vibrations
   (3) Inspect dry pit pumps and motors for leaks, unusual noise or vibrations
   (4) Record hour meter readings for each pump bank
   (5) Clean and maintain the pumping plant area
   (6) Inspect the motor control center to ensure proper operations

   Services to be performed every two weeks
   (1) Record generator hour meter reading
   (2) Check generator batteries, fuel, oil and coolant levels
   (3) Exercise generator, simulating power failure to insure automatic startup

   Services to be performed every 2 months
   (1) Conduct amperage test on each pump bank
   (2) Perform meg test on each pump motor to detect moisture in windings

   Services to be performed every year
   (1) Perform yearly maintenance and inspection of the sewer pumps per current ITT Flygt recommended checklist (See attachment No. A2).

Services to be performed as needed

(1) Vacuum wet well on an as needed basis, but at least two times per year.
(2) Utilize lift station degreaser as needed to control Fats, Oils, and Grease (FOG). MSDS for any product used shall be submitted to the Town for approval prior to use at lift stations.

Contractor shall provide monthly reports of all work performed for each pump station no later than the 15th day of the month following the performance of services. Cost for responding to and investigating pump station alarms shall be included in this bid item.

b. O'Keefe Road Sanitary Lift Station

Contractor shall perform the following services as outlined below to ensure optimum performance of various equipment including pumps:

Services to be performed each week

(1) Visually inspect and Check the wet well levels to ensure proper automatic start/stop levels for the pumps
(2) Check pumps for unusual noise or vibrations
(3) Record hour meter readings for each pump bank
(4) Clean and maintain the pumping plant area
(5) Inspect the motor control center to ensure proper operations

Services to be performed every 2 month

(1) Conduct amperage test on each pump bank.
(2) Perform meg test on each pump motor to detect moisture in windings

Services to be performed every year

(1) Perform yearly maintenance and inspection of the sewer pumps per current ITT Flygt recommended checklist (See attachment No. A2).

Services to be performed as needed

(1) Vacuum wet well on an as needed basis, but at least two times per year.
(2) Provide a portable generator within one hour of notification.
(3) Utilize lift station degreaser as needed to control Fats, Oils, and Grease (FOG).

Contractor shall provide monthly reports of all work performed for each pump station no later than the 15th day of the month following the performance of services. Cost for responding to and investigating pump station alarms shall be included in this bid item.

2. Cleaning and Flushing of sewer mains within the right-of-way (ROW) (Bid Item No. 2, see Attachment No. A3 for more detail on cleaning)
    a. Contractor shall develop and submit an overall maintenance plan and schedule using the CMMS system for cleaning and flushing of ROW lines in the street within the first month of contract and provide updates on the 15th day of every month thereafter. Plan shall be designed to reduce and eliminate stoppages, sanitary sewer overflows (SSO's), and sanitary sewer backups. Submit updated plan and schedule a month ahead of time indicating areas to be flushed and cleaned for Town's review and approval.
    b. Contractor shall be responsible for maintaining all sewer mains in the road right-of-way. Any mainline which can be accessed from at least one structure (manhole or cleanout) in the roadway right-of-way is considered part of bid item No.2, road ROW.
    c. Maintenance work shall include thorough cleaning to remove and capture roots, debris, fats, oils, and grease. Contractor will provide traffic control as needed and all labor and materials to flush and clean a minimum of 7,800 linear feet (measured in one direction) of pipe per month. The contractor shall prioritize flushing and cleaning efforts to reduce the overflow incidents. The contractor shall utilize high pressure jet flushing, power rodding, hand rodding and other methods to maintain the lines.
    d. The contractor shall have the following equipment available at any given time for maintaining ROW lines: 1- High pressure jet flushing unit with a built in vacuum, 1- power rodding machine, 1- hand rodding setup.
    e. Contractor shall utilize the Town's manhole and segment numbering system when recording maintenance efforts in the CMMS system.
    f. Contractor will be required to provide monthly reports of all work performed including total sewer line footage cleaned and notify Town of problem areas needing attention and/or actions, including but not limited to missing manhole or mislabeled information from the Town's map. Monthly reports to be received no later than the 15th day of the month following the performance of work
    g. Contractor shall develop a hot spot list and flush and clean the sewers with a history of stoppages at regular intervals of 3, 6, or 12 months or more as necessary depending upon the frequency of recurring stoppages. Cleaning of lines shall be per attached specifications Attachment No.A3.
    h. Contractor shall provide proactive and preventive sewer main maintenance to reduce and eliminate stoppages, sanitary sewer overflows (SSOs), and sanitary sewer backups.

3. Cleaning and Flushing of sewer main in easements (Bid Item No. 3, see Attachment No. A3 for more detail on cleaning)
    a. Contractor shall develop and submit an overall maintenance plan and cleaning schedule for all easement lines within the first month of contract and provide updates on the 15th day of every month thereafter. Submit updated plan and schedule a month ahead of time indicating areas to be flushed and cleaned for Town's review and approval.

b. Contractor shall be responsible for maintaining sewer mainlines in the Town's easements. Any mainline which does not have accessibility to a structure (manhole or cleanout) in the road right-of-way is considered part of easement sewer mainline.
c. Maintenance work shall include thorough cleaning to remove and capture roots, debris, fats, oils, and grease. Contractor will provide traffic control as needed and all labor and materials to flush and clean a minimum of 2,600 linear feet (measured in one direction) of pipe per month. The contractor shall prioritize flushing and cleaning efforts to reduce the overflow incidents. The contractor shall utilize trailer mounted mini high pressure jet flushing setup, power/hand rodding and other methods to maintain the easement lines.
d. The contractor shall have the following equipment available at any given time for maintaining easement lines: 1- trailer mounted mini high pressure jet flushing setup, 1- power rodding machine, 1- hand rodding setup.
e. Contractor shall utilize the Town's manhole and segment numbering system when recording maintenance efforts in the CMMS system.
f. Contractor will be required to provide monthly reports of all work performed including total sewer line footage cleaned and notify Town of problem areas needing attention and/or actions, including but not limited to missing manhole or mislabeled information from the Town's map. Monthly reports to be received no later than the 15th day of the month following the performance of work.
g. Contractor shall develop a hot spot list and flush and clean the sewers with a history of stoppages at regular intervals of 3, 6, or 12 months or more as necessary depending upon the frequency of recurring stoppages. Cleaning of lines shall be per attached specifications.
h. Contractor shall provide proactive and preventive sewer main maintenance to reduce and eliminate stoppages, sanitary sewer overflows (SSOs), and sanitary sewer backups.

4. CCTV Inspection of sewer mains and manholes in the Town ROW and easements (Bid item No. 4 and 5, see Attachment No. A3 for more detail on CCTV)
   a. The goal of the CCTV program is to complete a minimum of 3,900 linear feet of CCTV on lines with at least one access point from the road ROW, and a minimum of 1,040 linear feet of CCTV on lines with access from easement only. Provide CCTV schedule a month ahead of time indicating areas to be cleaned and videoed for Town's review and approval.
   b. After cleaning, the pipeline sections between manholes shall be visually inspected by means of closed-circuit television camera. The inspection shall be done one complete pipeline section at a time and the flow in the section will be suitably controlled. Video inspect, record and document the condition of the entire stretch of pipe from the upstream manhole centerline to the downstream manhole centerline including inspection of each manhole structure. The contractor shall use NASSCO PACP rating system for rating all defects observed within each pipe segment. All CCTV data shall be linked to the CMMS system daily as work is performed.
   c. Digital media recordings submitted to the Town on a (one TB) hard drive. Two (2) hard drives will be needed and one shall be submitted at the end of the first month and the second shall be submitted at the end of the second month at which time the contractor shall pickup the first hard drive to be used on alternating months for the

duration of the contract. Title to all the recordings shall transfer to the Town.

5. Sanitary Sewer Overflow Responses (Bid Item No.(s) 6, and 7)
    a. Contractor shall respond to all Sanitary Sewer Overflows (SSOs) in the right-of-way and in easements.
    b. Contractor shall enter SSO event details into the CMMS system.
    c. Contractor shall first contact Town staff, during off hours, when responding to a SSO.
    d. Contractor shall comply with Town's Sanitary Sewer Overflow and Backup Response Plan and Field Guide and use appropriate package(s) included in the response plan when necessary. A copy of the response plan, field guide and other associated items as indicated below are attached as Attachment No. A4.
    e. Contractor is required to respond to each SSO **within one hour** of receiving a report thereof and provide notification to all applicable regulating agencies within required timeframe , "Monitoring and Reporting Program" requirements from State Water Resources Control Board and "New Sanitary Sewer Overflow Notification Procedures (NP) for Sanitary Sewer Collection System" requirements from California Regional Water Quality Control Board, and "Regulatory Notification Packet (RN) " from Town's Sanitary Sewer Overflow and Backup Response Plan, for detail).
    f. The contractor will be responsible for all work associated with, but not limited to, providing traffic control as needed, containing the sewage spill, cleaning and disinfecting of the affected area of spill, relieving the stoppage and eliminating the cause of stoppage, installation of sandbags, barricades and signage, etc.. The contractor shall make every effort to protect all drainage facilities and specially the waters of the State of California. If the sewage back up has caused property damage, follow the Sanitary Sewer Backup Guideline and coordinate with the Town to engage the services of cleaning company.
    g. Contractor shall document SSO events by taking photos and submit them with the written SSOs report to the Town via email or fax **within four-work-hours** of completing the emergency response. (For example, if a SSO response is completed at 7pm on a Friday evening, the report will require to be submitted by 12pm on the following Monday.)
    h. Upon completion of emergency work, contractor shall submit a report to the Town estimating the gallons of sewer spilled, gallons retrieved, and volumes discharged to the waters of the State.
    i. Contractor shall perform CCTV video inspection of the blockage area by the next business day of SSO incident, determine the cause of the SSO and provide a digital copy to the Town within 24 hours of obtaining the CCTV data.
    j. The contractor shall have the equipment available at any given time (within one hour of notification) for response to SSO's including but not limited to a spill response vehicle equipped with spill containment materials (trash pump with hoses, containment material, cleanup materials, traffic control and warning signage, etc..). Other equipment needed following the initial SSO assessment include: 1- mounted mini high pressure jet flushing setup, 1- power rodding machine, 1- hand rodding setup.

k. The contract price paid for Bid Item #6 includes SSO response in the ROW per month of the contract regardless of the quantity of SSO's per month. Bid Item #7 is for response to SSO's within easements regardless to the quantity of SSO's per month. The goal is to minimize the quantity and amount of SSO's throughout the SSCS by providing prioritized maintenance schedules to minimize the risk of SSO's throughout the system. See Measurement and Payment section, Attachment A1 and A6 for details on location and number of historic SSO's per year. Cost for checking the mainline and verifying lateral problem shall be included in these bid items.

6. Maintenance of CMMS Database and GIS mapping (Bid Item No.(s) 8 and 9)
   a. Contractor shall propose CMMS software for use in maintenance record keeping and advanced planning for operation and maintenance of the SSCS. The database and mapping features within the CMMS shall utilize the most current GIS assets contained in the GIS database. The contractor shall deliver or make available reports on a monthly basis related to maintenance activities completed and planned for the coming month using the CMMS system. The contractor shall provide one seat license and realtime access to the CMMS software for the duration of the contract. The contractor shall review past maintenance history to develop a Hot Spot list of segments that need to be cleaned more frequently. Bid item No. 9 shall cover the cost to migrate the existing CMMS and GIS database files from Infonet and ArcGIS to the new CMMS and GIS systems and generation of a draft Hot Spot list. All historic and all future CCTV shall also be linked to the CMMS system for quick access to the records. All cleaning, CCTV, PACP ratings, lateral locations, pipe conditions, changes and additions shall be entered into the CMMS/GIS system in a timely manner. The contractor shall utilize a CMMS software capable of exporting all maintenance history data on the sewer system into a database format. The contractor shall deliver to the Town a complete database export of all maintenance history upon completion or termination of the Contract Term.

   b. Contractor shall utilize ESRI GIS ArcInfo mapping software (Version 10.3 or greater), or approved equal, for maintaining additions or corrections to the base map and database of the SSCS. The contractor shall make up to 10 hours of corrections or additions to the map monthly with authorization by the City Engineer. The contractor shall utilize a GIS mapping software capable of exporting all data on the sewer system into a shapefile format. The contractor shall deliver to the Town a complete shapefile or file geodatabase export of all feature class layers upon completion or termination of the Contract Term.

Proposal Requirements

The following information is requested to be included with your proposal for this work:

1. A statement acknowledging that all personnel occupied in performance of the field work will be paid prevailing regional wages (classification Laborer Group 1B for Santa Clara County) and the submission of certified pay rolls to the Town.
    a. Prevailing Wages. In accordance with the provisions of Section 1770 et seq., of the Labor Code, the Director of the Department of Industrial Relations of the State of California has ascertained the general prevailing rate of wages applicable to the work to be done under contract for public improvement. The selected Respondent will be required to pay to all those employed on the project sums not less than the sums set forth in the documents entitled "General Prevailing Wage Determination made by the Director of Industrial Relations pursuant to California Labor Code Part 7, Chapter 1, Article 2, Sections 1770, 1773, 1773.1 and 1776." A copy of said documents is on file and may be inspected in the office of the City Engineer. The selected Respondent shall post a copy of the prevailing wage rates at each job site. The information is also available on the website www.dir.ca.gov/dlsr. The selected Respondent shall comply with the provisions of California Labor Code Sections 1774 and 1775 concerning the payment of prevailing rates of wages to workers and the penalties for failure to pay prevailing wages.

2. A list of current clients where similar services are provided with contact person name, size of current contract and number of pump stations and length and size of sewer mains maintained. As a minimum the contractor shall provide operations and maintenance services to at least two public agencies or sanitary districts.
3. Specific related experience of sewer system management and maintenance, lift station maintenance; and emergency response services.
4. A statement of your firm's acceptance of the Town's insurance and indemnification requirements, or any reservations your firm has with the requirements.
5. A list of your firms existing equipment and quantity of each to perform the work as specified herein.
6. A list of you current employees and their certifications to perform the work as specified herein. Include all NASSCO PACP/MACP certifications for each employee or other certifications that are relevant to the scope of work.
7. A description of the proposed CMMS/GIS software and link to provider's web site.

All questions regarding this proposal shall be directed to Richard Chiu, Public Works Director or Jen Chen, Associate Engineer at Town of Los Altos Hills.

Contractor Selection and Proposal Format

The basis of selection will be according to the bid price, contractor qualifications, relevant experience with public agencies or sanitary districts, CMMS software proposed, results of reference checks, and contractor's net worth. The Respondent selected based on the aforementioned criteria will be awarded the contract for a 12-month period, with the option to

extend for additional 12-month intervals with mutual consent of the Town and contractor. Proposals should concisely communicate the information requested by the Town.

Proposal Submittal

Three (3) copies of the proposal shall be submitted to the Town of Los Altos Hills, City Clerk no later than **2:00 PM on May 20, 2014** in a sealed envelope. The City Clerk will not accept any proposal submitted after the bid submission time. All submitted copies become the property of the Town of Los Altos Hills. The Town shall not be held liable for any costs associated with the preparation or presentation of any proposal. After the review and evaluation of the proposals, the Town will select a contractor for submission to City Council for award of contract.

Standard Contract Agreement and Insurance

A copy of the **Agreement for the Operation and Maintenance of the Los Altos Hills Sewer System** is attached for your information (Attachment No. A5). The selected contractor will be expected to sign a contract with similar terms and conditions, absent any changes to the indemnification provisions.

The Contractor will be required to carry insurance indicated in section 4 of the attached agreement for the Operation and Maintenance of the Los Altos Hills Sewer System.

Should you have any questions or need additional information, please contact:

Richard Chiu,	Public Works Director	(650) 947-2516	rchiu@losaltoshills.ca.gov or
Jen Chen,	Associate Engineer	(650)-947-2511	jchen@losaltoshills.ca.gov

Disclosure to Third Parties

All proposals received in response to this RFP will become the property of the Town and will not be returned. Within the requirements of California law, the Town intends to retain the submitted proposals as confidential documents for disclosure only to the Town's officers and employees until the Qualified Respondent is identified and negotiations completed. Subject to California law relating to access to public records, the Town may be required to publicly disclose all submitted information and materials to third parties requesting such information. If a Respondent believes that portions of its proposal are exempt from disclosure to third parties, under this or any other provision of the law, the Respondent must clearly label the specific portions that are to be kept confidential and shall state to the Town why the information is confidential and exempt from disclosure. Marking all or substantially the entire proposal as confidential may result in the Respondent being considered non-responsive by the Town.

Measurement and Payment

Bid Item No.1 – **Pump Station Maintenance**: Maintenance of both of the Town's sewer pump stations to ensure proper pump operations. Responding to and investigating pump station alarms shall be included in this item. Measurement and payment for this bid item shall be paid per month of services rendered.

Bid Item No. 2 – **Cleaning and Flushing in ROW**: A minimum of 7,800 linear feet of sewer mainline cleaning and flushing is required where at least one entry point is accessible from the right-of-way (ROW, measured in one direction) per month. The total quantities of sewer main with access to both ends of the line from the ROW is approximately: 994 segments & 191,800 LF, and the quantity of sewer main with access to only one end from the road ROW is approximately: 192 segments & 42,238 LF. No segment shall be repeated until all mainlines in the road right-of-way are flushed and cleaned once, with the exception of known history of stoppages or per hot spot schedule. Measurement and payment for this bid item shall be paid per linear foot of pipe cleaned and entered in CMMS system.

Bid Item No. 3 – **Cleaning and Flushing in the Easements:** A minimum of 2,600 linear feet of sewer mainline cleaning and flushing is required where entry point is only accessible from easements (measured in one direction) per month. No segment shall be repeated until all mainlines in the easements are flushed and cleaned once, with the exception of known history of stoppages or per hot spot schedule. Measurement and payment for this bid item shall be paid per linear foot of pipe cleaned and entered into the CMMS system.

Bid Item No. 4 – **CCTV Inspections with Access from Right-Of-Way:** A total of 3,900 linear feet of sewer main is required to be inspected per month where at least one entry point is accessible from the right-of-way. The total quantities of sewer main with access to both ends of the line from the ROW is approximately: 994 segments & 191,800 LF, and the quantity of sewer main with access to only one end from the ROW is approximately: 192 segments & 42,238 LF. Measurement and payment for this bid item shall be paid per linear foot of pipe inspected and rated per PACP standards and entered and linked to the CMMS system.

Bid Item No. 5 – **CCTV Inspections with Access from Easements Only:** A total of 1,040 linear feet of sewer main is required to be inspected per month where entry point is only accessible from easements. Measurement and payment for this bid item shall be paid per linear foot of pipe inspected and rated per PACP standards and entered and linked to the CMMS system.

Bid Item No. 6 – **Response to SSO's with Access from Right-of-Way:** Respond to sanitary sewer overflow (SSO) and comply with notification requirements established by State and Regional Water Boards. This item is applicable to the SSO events that occur within the right-of-way. The contract price paid for this Bid Item shall include traffic control as needed, all labor, material, preparation and clean-up work

related to overflow event, documentation and reporting, entering SSO event details into the CMMS system, follow up CCTV inspections of the problematic sections to investigate and determine the cause of overflow. Clean-up work shall include but not be limited to using all reasonable efforts to recover as much of the SSO as possible. The Town has previous overflow information such as location, date, and video inspections. Contractor shall review the maps and SSO history reports (Attachment No.s A1 and A6) and incorporate into the maintenance program and preventive strategies. Checking the mainline and verifying lateral problem shall be included in this item. Measurement and payment to respond to this type of SSO shall be paid per month regardless of the number of SSO's.

Bid Item No. 7 – **Response to SSO's with Access from Easement Only:** Respond to sanitary sewer overflow (SSO) and comply with notification requirements established by State and Regional Water Boards. This item is applicable to the SSO events that occur in easements. The contract price paid for this Bid Item shall include traffic control as needed, all labor, material, preparation and clean-up work related to overflow event, documentation and reporting, entering SSO event details into the CMMS system, follow up CCTV inspections of the problematic sections to investigate and determine the cause of overflow. Clean-up work shall include but not be limited to using all reasonable efforts to recover as much of the SSO as possible. The Town has previous overflow information such as location, date, and video inspections. Contractor shall review the maps and SSO history reports (Attachment No.s A1 and A6) and incorporate into the maintenance program and preventive strategies. Checking the mainline and verifying lateral problem shall be included in this item. Measurement and payment to respond to this type of SSO shall be paid per month regardless of the number of SSO's.

Bid Item No. 8 – **Initial Setup and Database Transfer for CMMS and GIS Systems:** The initial setup and database transfer for CMMS and GIS systems includes importing all of the Town's existing CMMS database and GIS databases and feature class layers and development of a minimum of 6 custom data collection forms. The contractor shall provide one seat license and realtime access to the CMMS software for the duration of the contract. All historic and all future CCTV shall also be linked to the CMMS system for quick access to the records. The contractor shall also develop a hot spot maintenance priority schedule for discussion with Town staff. The hot spot list shall be incorporated into the cleaning schedule for the year upon approval from the Town. The cleaning costs are included in bid items 1 and 2. Measurement and payment for this bid item shall be paid Lump Sum upon successful conversion/transfer of all CMMS, GIS data and receipt of hot spot list.

Bid Item No. 9 – **GIS Mapping Maintenance and Updates:** The GIS line, point and polygon features for the sewer system will need to be modified on a monthly basis to incorporate new and past CIP projects and discrepancies/clarifications found in the field. All GIS changes shall be tracked in a spreadsheet format indicating the type of change, location, time to complete each edit and who made the edit to the system. The most current GIS feature class mapping and database shall be

uploaded to the CMMS on a quarterly basis at a minimum. Measurement and payment for this bid item includes up to 10 hours of GIS modifications per month and shall be paid per hour.

Bid Item No. 10 – **Monthly Management Reports:** The contractor shall provide a monthly management report to the Town and meet and present the report to the PW Director each month. The report should include an executive summary, description of all work performed in the month, listing of any adverse conditions found or immediate actions required, listing of SSO's the cause and actions taken, CMMS update status, work schedule for the following 90 days and any recommendations for CIP or operational changes. The contractor shall also perform an annual audit required by the SSMP, prepare the findings and submit the report to the Director at the end of each contract year.

SANITARY SEWER SYSTEM OPERATIONS, MAINTENANCE, AND MANAGEMENT SERVICES				
Bid Item	Quantity	Unit	Unit Price	Item Total
1. 2 Pump Station Operation & Maintenance (include alarm responses)	12	Month	$	$
2. Cleaning and Flushing of 7,800 LF of sewer main in road right-of-way per month	93,600	LF	$	$
3. Cleaning and Flushing of 2,600 LF of sewer main in easements per month	31,200	LF	$	$
4. CCTV Inspections of 3,900 LF of sewer main and manholes in right-of-way per month	46,800	LF	$	$
5. CCTV Inspections of 1,040 LF of sewer main and manholes in easements per month	12,480	LF	$	$
6. Sanitary Sewer Overflow Response with access from road right-of-way (include responses to verify lateral problem)	12	Month	$	$
7. Sanitary Sewer Overflow response with access from Easement Areas only (include responses to verify lateral problem)	12	Month	$	$
8. Initial setup and database transfer for CMMS and GIS Systems	1	LS	$	$
9. GIS mapping maintenance and updates (includes up to 10 hours of GIS mapping additions, or modifications per month).	120	Hours	$	$
10. Monthly Management Reports	12	Month	$	$
		TOTAL	$	

Attachments

A1. Town of Los Altos Hills Sanitary Sewer Maps (2)

A2. Sample ITT Flygt Checklist

A3. Cleaning and Video Inspection of Sewer Pipe Specifications

A4. Sanitary Sewer Management Plan (SSMP) : Sanitary Sewer Overflow and Backup Response Plan

A5. Standard Contract and Insurance Requirements

A6. Summary of SSO Data from 2011 - 2014

Attachment 2

ITT Flygt Corporation
790-A Chadbourne Road
Fairfield, CA 94534
Tel: (707) 422-9894
Fax. (707) 422-9808

SCHEDULED PUMP PREVENTATIVE MAINTENANCE INSPECTION AGREEMENT FLYGT CORPORATION

SERVICE - 21 POINT CHECK LIST

- ☐ Check electrical condition of insulation on power cable and on all phases of motor. (In Meg Ohms)
- ☐ Check for any loose or faulty electrical connections within the pump control panel.
- ☐ Measure resistance between stator windings. (In Ohms)
- ☐ Check voltage supply between all phases of the electrical control panel. (VAC)
- ☐ Check voltage balance between all phases on the load side* of the pump control with pump on. (VAC)
- ☐ Check amperage draws on all phases of the pump motor. (In Amps)
- ☐ Check condition and operation of motor thermal protectors control system (if so equipped).
- ☐ Removal of Flygt pump from lift station for physical inspection.
- ☐ Check condition of upper shaft seals (inspect condition of motor housing).
- ☐ Check condition and operation of leakage detector (if so equipped).
- ☐ Check lower shaft seals (inspect condition of oil).
- ☐ Change oil if needed (cost of oil included).
- ☐ Check for worn or loose impeller.
- ☐ Check all impeller wear rings. (Note: Wear rings are not covered by warranty and must be purchased by customer if in need of replacement)
- ☐ Check for noise upper and lower bearings.
- ☐ Check physically for damage of pump and power cable.
- ☐ Clean, reset, and check operation of level sensors.
- ☐ Check for correct shaft rotation.
- ☐ Reinstall Flygt pump and check for leakage at the discharge connection.
- ☐ Test of pump operation cycle (if level of liquid in station permits).
- ☐ Check operating of valves and pipes in station.

CLEANING AND VIDEO INSPECTION OF SEWER PIPE

PART 1 - GENERAL

1-1. SCOPE. This section covers the cleaning and video inspection of sewer pipelines. The word "clean" in this section is defined as the removal of all accumulations including sludge, dirt, sand, rocks, grease, roots, and other solid or semisolid material in the pipe or manhole and on the pipe or manhole inside wall, down to the parent material.

1-2. SUBMITTALS. Each of the Contractor's crews, upon completion of their first 1000 LF, shall submit one paper copy of the video logs and one digital copy on a 1TB hard drive for review and acceptance prior to continuing work.

One paper copy of the video logs and one digital copy using color video and clear audio information shall be submitted to the Town to upload to the Town server. Work will not be considered complete until these items have been received and approved by the Engineer.

1-3. EXPERIENCE. Camera Technician Experience: Each camera technician shall have a minimum of 5 years experience with at least 100,000 LF in projects televising sanitary sewer lines and commenting on observed defects.

PART 2 - PRODUCTS

2-1. MATERIALS.

2-1.01. Video Inspection - the television camera used for the inspection shall be one specifically designed and constructed for operation in connection with sewer inspection. It shall be operative in 100 percent humidity conditions and have a 360-degree radial view rotating head. The camera head shall be capable of rotating to view up lateral connections and to evaluate defects. Lighting and camera quality shall be suitable to allow a clear in-focus picture of a minimum of six linear feet of the entire inside periphery of the sewer pipe. Lighting for the camera shall minimize reflective glare. To insure peak picture quality throughout all conditions encountered during the survey, a variable intensity control of the camera lights and remote control adjustments for focus and iris shall be located at the monitoring station. Focal distance shall be adjustable through a range of from six inches to infinity. Continuously displayed on the monitor shall be the date of the survey, number designation of the upstream and downstream manholes corresponding to the line section being surveyed, and a continuous forward and reverse readout of the camera distance from the manhole of reference. The remote reading footage counter shall be accurate to two-tenths of a foot. The camera, television monitor and other components shall be capable of producing a minimum 500 line resolution color video picture. The equipment shall have an operation length at least 800 feet.

PART 3 - EXECUTION

3-1. CLEANING AND VIDEO INSPECTION.

3-1.01. Cleaning. Pipelines and structures shall be cleaned using a high velocity jet cleaner. The equipment shall be truck mounted for ease of operation. The equipment shall have a minimum of six hundred (600) feet of high pressure hose with a selection of two or more high velocity nozzles. Nozzles shall be capable of producing a scouring action from 15 degrees to 45 degrees in all designated line sizes. The equipment shall carry its own water tank capable of holding corrosive or caustic cleaning or sanitizing chemicals, auxiliary engines and pumps, and hydraulically driven hose reel. All controls shall be located so that the equipment can be operated above ground. Equipment shall include a high-velocity gun for washing and scouring manhole walls and floor. The gun shall be capable of producing flows from a fine spray to a solid stream.

Roots shall be removed in the designated sections where root intrusion is a problem. Roots shall not be a reason for reverse set-ups for CCTV work. Special attention should be used during the cleaning operation to ensure complete removal of roots from the pipes. Procedures may include the use of mechanical equipment such as rodding machines, bucket machines and winches using root cutters and porcupines, and equipment such as high-velocity jet cleaners.

The material resulting from the cleaning operation shall be removed at the downstream manhole of the reaches being cleaned, through the use of a filtering device. The material collected at the downstream manholes shall become the property of the Contractor. It shall be removed from the site by the Contractor in a closed container and disposed of in a legal manner. It shall not be dumped into streets, ditches, catch basins, or storm sewers. Flushing of the material from manhole reach to manhole reach is unacceptable.

Acceptance of the sewer line cleaning shall be made upon the successful completion of the video inspection and shall be to the satisfaction of the Engineer. If video inspection shows the cleaning to be unsatisfactory, the Contractor shall be required to re-clean and re-inspect the sewer main at no additional cost to the Town.

3-1.02. Material Dewatering and Disposal. Contractor shall screen all the debris collected prior to analysis and disposal. Contractor shall haul and properly dispose of material at a class 3 landfill.

3-1.03. Video Inspection. Depth of flow shall not exceed thirty percent (30%) of the inside pipe diameter as measured in the manhole when performing video inspection. In the event the depth of flow of the reach being televised exceeds thirty percent (30%) of the inside pipe diameter, the Contractor shall provide the necessary flow control or reschedule the inspection for a time when such flow is reduced to permit proceeding with the work.

Video equipment shall include a multi-angle television camera capable of spanning 360-degrees circumference and 270-degrees on horizontal axis to televise sewer lines 6-inch diameter or larger; the purpose of the rotating head camera is to view all service connections, upstream and

downstream manhole structures, and to locate all defects, as well as questionable problem areas; focal distance shall be adjustable through a range of one (1) inch to infinity. The television camera shall be color format and specifically designed and constructed for operation in connection with sewer inspection, and for operation in sewers under 100% humidity conditions. Lighting and camera quality shall produce a clear, in-focus picture of the entire periphery of the pipe for a minimum distance of six feet. Other required equipment are television monitor, cables, power sources, lights, and other equipment necessary to do the work.

The CCTV inspection shall start and stop at each manhole and shall record the condition of each manhole structure. The camera shall be moved through the pipeline in either direction at a uniform rate, stopping when necessary to ensure proper documentation of the sewer's condition. In no case shall the television camera be pulled or propelled at a speed greater than thirty (30) feet per minute. The camera height shall be adjusted such that the camera lens is always centered in the pipe being inspected. The equipment shall have an accurate footage counter, which shall display on the monitor the exact distance of the camera from the centerline of the starting manhole. Unless otherwise approved by the Engineer, footage measurements shall begin at the centerline of the upstream manhole.

Prepare a digital visual and audio record of the inspection to document conditions observed. Recording playback shall be at the same speed in which it was recorded. Slow motion or stop-motion playback features may be supplied at the option of the Contractor. The Contractor shall have all recordings and necessary playback equipment readily accessible for review by the Town during the work. Each segment of the submitted final recording shall begin and end at a manhole or cleanout, which shall be identified by the nomenclature used in the Town's Sewer Map.

The date, identification of sewer reach(es) by upstream and downstream manhole numbers, and manhole to manhole footage and slope shall be displayed on the video data view at all times. Each recording shall be permanently labeled with the Contractor's name, date televised, street name(s), identification of the sewer reach(es) inspected, and run number. If the recordings are of such poor quality that the Engineer is unable to evaluate the condition of the sewer, locate sewer service connections, or verify cleaning, the Contractor shall re-televise the sanitary sewer and provide a new recording of good quality at no cost to the Town. No payment will be made for recordings that do not meet the requirements of these specifications.

If, during the inspection operation at anytime, the television camera cannot make a complete pass through the entire pipeline section (between the two accessible manholes), the Contractor shall reverse setup the equipment so that the inspection can be performed and completed from the opposite manhole. A continuous video shall be completed if the television camera can make a complete pass from the opposite manhole. The video should cover the entire length of the section. Once a potential point repair has been identified, documentation on color photo paper and digital copy shall be submitted to the Town's Representative of the obstruction location(s) and length(s) in linear feet from an identified manhole.

In addition to recording the condition of sewer mains, the Contractor shall also stop the camera at each lateral or service line entry point and aim the camera up into the line. Document the location (distance) and condition of each lateral or service line with both color paper photo and digital photo to be included in the Television Inspection Documentation.

CCTV Inspection Log and Summary: Contractor shall furnish a database in digital format and on color paper print of all collected information such as location, relation to adjacent manholes, defect observed, as defined in the NASSCO's PACP defect codes. Contractor shall confer with the Engineer regarding database format and desired data fields prior to commencing work. Inspection log and summary reports shall be submitted to the Town Engineer for review and approval prior to commencing work. All CCTV database format including inspection documentation, observation codes, full streaming video and still images must be delivered in a compatible format. All CCTV video streaming and imagery shall be MPEG-4 and JPEG format or equivalent, respectively. Current supported commercial software applications that capture this data in the correct format include: Possem, PicAx2 and WinCan v7. Contractor shall log all observations using the NASSCO's PACP/MACP current version observations code-set. The information shall also include the manhole inspection logs. In addition, other points of significance such as locations of building sewers, unusual conditions, roots, storm sewer connections, broken pipe, cracks, presence of scale and corrosion, and other discernible features shall be recorded and a copy of such records will be supplied to the Town. The Town will require that all technicians performing the CCTV will be certified through the NASSCO's PACP/MACP.

The closed-circuit television inspection shall be completed in the same direction each time (upstream to downstream), unless a reverse setup is necessary, and shall be done with a color camera with all inspection log data, footage, observations, still images and full streaming video with audio captured digitally using a digital video inspection software program. A pan and tilt camera shall be used for all pipelines that are 6-inches or greater in diameter.

Digital Video Recordings: The purpose of the recordings shall be to supply a digital visual and audio record of the sewer lines to document current condition, problem areas and connections in the lines. Recording playback shall be at the same speed in which it was recorded. Slow motion or stop-motion playback features may be supplied at the option of the Contractor. Title to the recording shall remain with the Town. The final recording(s) should be edited to include complete sewer main(s) from beginning to end, followed immediately by its tributary sources. In the rare instance where the camera cannot traverse the entire section of a pipeline between manholes, the recording can be made from each of the two adjacent manholes to the restriction, but shall be edited so that both segments are adjacent on the final recording. The date, time, location, pipe diameter, direction of travel and continuous distance traveled shall all be clearly annotated in the corresponding inspection database along with all observation codes. All comments related to the inspection and to individual observations must be typed into an associated comment text field and be retrievable from within the inspection database.

END OF SECTION

IX. Task List and Proposed Cost (Cont'd)

Task	Description	Unit Cost	Quantity	12-Month Cost
Bid Item No. 1. Pump Station Maintenance	West Bay will perform maintenance on the Town's two pump stations following the schedule outlined in the RFP and provide 24-hour emergency response. Pump station maintenance includes wet well cleaning twice annually, and degreaser application as needed.	$1,670/mo	12 months	$20,040
Bid Item No. 2. Cleaning and Flushing in ROW	West Bay will clean sewer pipelines using our fleet of equipment and tools. **93,600 lf** of pipe within the public right-of-way will be cleaned, with approximately 20 percent of this pipe accessible from only one end. This effort includes development of a progressive cleaning strategy (to move pipes on and off of the hot spot list) using CMMS, and QA/QC of cleaning activities through CCTV inspection. Cleaning results will be included in the CMMS.	$0.92/lf	93,600 lf	$86,112
Bid Item No. 3. Cleaning and Flushing in Easements	West Bay will clean sewer pipelines in easements using our fleet of equipment and tools. **31,200 lf** of pipe will require cleaning, assuming all of the pipe is accessible from only one end. The progressive cleaning strategy described in Bid Item No. 2 will include these pipes. Results will be included in the CMMS.	$1.31/lf	31,200 lf	$40,872
Bid Item No. 4. CCTV Inspection within ROW	West Bay will complete CCTV inspection of **46,800 lineal feet** of pipelines that are accessible through both ends of the pipe (to allow access of a pan-and-tilt camera as required to meet NASSCO PACP standards). Structural and O&M condition ratings and defect codes that use the PACP standard will be entered into the CMMS system as part of this item.	$1.40/lf	46,800 lf	$65,520
Bid Item No. 5. CCTV Inspection within Easements	West Bay will complete CCTV inspection of **12,480 lineal feet** of pipelines that are accessible through both ends of the pipe within easements. Similar to Bid Item No. 4, CCTV results will be incorporated into the CMMS.	$1.80/lf	12,480 lf	$22,464
Bid Item No. 6. Response to SSOs with access from Right of Way	West Bay will follow the Town's Sewer System Management Plan and Overflow Emergency Response Plan in responding to and conducting initial reporting of sanitary sewer overflows. The Town will serve as the Legally Responsible Official (LRO). The Town's SSMP closely follows the West Bay SSMP, which requires response within 60 minutes from notification. Following the SSO, and subsequent CCTV inspection, West Bay will make recommendations as to follow-up actions, including identifying issues related to lateral connections. We consider SSO Avoidance and Response as the most critical components of our operating strategy, and are well trained to address SSOs of all sizes, at any time, as described further in Section V. This item proposes a "per-SSO" approach. West Bay agrees to complete SSO response at no cost to the Town if the SSO in question resulted from inadequate cleaning by West Bay up to six months prior to the SSO.	$1,200/SSO	6 SSOs	$7,200
Bid Item No. 7. Response to SSOs with access from Easements only	West Bay will provide SSO response and reporting for issues that occur within easements, following the approach described in Bid Item No. 6.	$1,380/SSO	6 SSOs	$8,280
Bid Item No. 8. Initial Setup and Database Transfer form CMMS and GIS Systems	West Bay will import the Town's CMMS data into Lucity CMMS software, and will develop at least six data collection forms in collaboration with the Town. This scope includes one seat license that is dedicated to the Town (includes Sewer module, CCTV module, Work Order module, GIS module, and Overflow module), and online access by the Town to its data. The CMMS and GIS shall provide access to the Town's CCTV data and hot spot maintenance schedules. This task includes generation of the initial Town hot spot list.	$24,500 Lump Sum	1 LS	~~$24,500~~ $5,500
Bid Item No. 9. GIS Mapping Maintenance and Updates	West Bay will integrate new sewer system O&M information into the GIS maps on a monthly basis. This task includes maintenance of a change log and integration of other mapping updates as provided by the Town.	$125/hour	120 hours	$15,000
Bid Item No. 10. Monthly Management Reports	At the beginning of the project, we will develop a standard monthly summary format that includes the performance indicators that will be tracked and measured on a monthly and annual basis. These indicators will correlate closely to the measures that are described in Element 9 of the Town's SSMP. If these elements are not yet defined, we will assist the Town in developing a list that follows Regional Board expectations. The summaries will integrated progress made in pump station maintenance, and shall document any issues and recommendations to address these issues. This task includes the Town's biannual SSMP audit.	$350/month	12 months	$4,200
Bid Item No. 11. Sanitary Sewer Overflow Response for Private Laterals	West Bay will respond to SSOs related to private laterals, including determining ownership, notifying the owner of the issue, providing the owner with the Town's Sewer Spill Reference Plan, and entering information into the CMMS system.	$310/lateral	6 SSOs	$1,860
			Total	~~**$296,048**~~ **$277,048**

Note: This bid item will be reduced to $5,500 if the Town decides to use the West Bay license in lieu of purchasing a new seat license.

- In addition, West Bay offers up to six point or spot repairs annually, and has provided example unit rates following this bid sheet.
- Pump station repairs will be completed on a time and materials basis, at a cost of $90/hour with a 2-hour minimum. Parts and materials will be provided at cost plus 10 percent.

LOS ALTOS HILLS
CALIFORNIA

ADDENDUM NO. 1

DATE: **Issued on May 14, 2014**

Subject: **Request for Proposals - 2014 Sanitary Sewer System Operations and Maintenance**

PROPOSAL DUE DATE: Tuesday, May 27, 2014 at 2:00PM

TO ALL PROSPECTIVE PROPOSERS:

Attached is Addendum No. 1 to the 2014 Sanitary Sewer System Operations and Maintenance RFP.

Your proposal shall be based on the RFP as modified by this addendum.

Yours truly,

Richard Chiu

Richard Chiu
Public Works Director/City Engineer

Attachment: Addendum No. 1

26379 Fremont Road
Los Altos Hills
California 94022
650 / 941-7222
Fax: 650/941-3160
650 / 941-7222

ADDENDUM NO. 1

May 14, 2014

SUBJECT: 2014 Sanitary Sewer System Operations and Maintenance - RFP.

This Addendum No. 1 to the RFP shall be taken into consideration in the preparation of your proposal. See below for actual changes.

PAGE 1 and 10 of the RFP:

1. The proposal due date has been extended by one week to:
   Tuesday, May 27, 2014, 2:00 PM at Town Hall

Detailed Description of Work:

- Section 5- Replace paragraph 5.k on Page 8 in its entirety with the following:

k) The contract price paid for Bid Item #6 includes SSO response in the ROW **per occurrence**. Bid Item #7 is for response to SSO's within easements **per occurrence**. The goal is to minimize the quantity and amount of SSO's throughout the SSCS by providing prioritized maintenance schedules to minimize the risk of SSO's throughout the system. **If an SSO occurs on a line that has been maintained/cleaned in the prior six (6) months the response to that SSO shall be completed at no cost to the Town.** See Measurement and Payment section, Attachment A1 and A6 for details on location and number of historic SSO's per year.

Measurement and Payment:

- Replace Bid Item No. 6 starting on page 12 in its entirety and substitute with the following:

  Bid Item No. 6 – **Response to SSO's with Access from Right-of-Way:** Respond to sanitary sewer overflow (SSO) and comply with notification requirements established by State and Regional Water Boards. This item is applicable to the SSO events that occur within the right-of-way. The contract price paid for this Bid Item shall include traffic control as needed, all labor, material, preparation and clean-up work related to overflow event, documentation and reporting, entering SSO event details into the CMMS system, follow up CCTV inspections of the problematic sections to investigate and determine the cause of overflow. Clean-up work shall include but not be limited to using all reasonable efforts to recover as much of the SSO as possible. The Town has previous overflow information such as location, date, and video inspections. Contractor shall review the maps and SSO history reports (Attachment No.s A1 and A6) and incorporate into the

maintenance program and preventive strategies. **If an SSO occurs on a line that has been maintained/cleaned in the prior six (6) months the response to that SSO shall be completed at no cost to the Town.** Measurement and payment to respond to this type of SSO shall be paid **per occurrence.**

- Replace Bid Item No. 7 on page 13 in its entirety and substitute with the following:

  Bid Item No. 7 – Response to SSO's with Access from Easement Only: Respond to sanitary sewer overflow (SSO) and comply with notification requirements established by State and Regional Water Board. This item is applicable to the SSO events that occur in easements. The contract price paid for this Bid Item shall include traffic control as needed, all labor, material, preparation and clean-up work related to overflow event, documentation and reporting, entering SSO event details into the CMMS system, follow up CCTV inspections of the problematic sections to investigate and determine the cause of overflow. Clean-up work shall include but not be limited to using all reasonable efforts to recover as much of the SSO as possible. The Town has previous overflow information such as location, date, and video inspections. Contractor shall review the maps and SSO history reports (Attachment No.s A1 and A6) and incorporate into the maintenance program and preventive strategies. **If an SSO occurs on a line that has been maintained/cleaned in the prior six (6) months the response to that SSO shall be completed at no cost to the Town.** Measurement and payment to respond to this type of SSO shall be paid **per occurrence.**

- Add new Bid Item No. 11 **"Response to SSO's related to Private Sewer Laterals"** immediately following Bid Item No 10 on page 14 as follows:

  Bid Item No. 11 – Response to SSO's related to Private Laterals: Respond to sanitary sewer overflow (SSO) and if it is determined that it is related to private sewer lateral versus a public mainline issue the contractor will notify the owner that it is a private lateral problem and follow the instructions in the SSO/Backup and Response Plan - BP1 Side A and provide the owner with the "Sewer Spill Reference Plan" in the Town's Emergency Overflow Response Guide.. The contract price paid for this Bid Item shall include traffic control as needed, all labor, material, preparation and entering private lateral SSO event details into the CMMS system. This will require the contractor to investigate the public mainline to determine if the mainline is causing the backup in the private sewer lateral. **Measurement and payment to respond to this type of SSO shall be paid per occurrence.**

Bid Schedule:

- Replace the bid schedule in its entirety with the following page:

SANITARY SEWER SYSTEM
OPERATIONS, MAINTENANCE, AND MANAGEMENT SERVICES

Bid Item	Quantity	Unit	Unit Price	Item Total
1. 2 Pump Station Operation & Maintenance (include alarm responses)	12	Month	$	$
2. Cleaning and Flushing of 7,800 LF of sewer main in road right-of-way per month	93,600	LF	$	$
3. Cleaning and Flushing of 2,600 LF of sewer main in easements per month	31,200	LF	$	$
4. CCTV Inspections of 3,900 LF of sewer main and manholes in right-of-way per month	46,800	LF	$	$
5. CCTV Inspections of 1,040 LF of sewer main and manholes in easements per month	12,480	LF	$	$
6. Sanitary Sewer Overflow Response with access from road right-of-way	**6**	**EA**	$	$
7. Sanitary Sewer Overflow response with access from Easement Areas only	**6**	**EA**	$	$
8. Initial setup and database transfer for CMMS and GIS Systems	1	LS	$	$
9. GIS mapping maintenance and updates (includes up to 10 hours of GIS mapping additions, or modifications per month).	120	Hours	$	$
10. Monthly Management Reports	12	Month	$	$
11. Sanitary Sewer Overflow response for private laterals	**6**	**EA**	$	$
		TOTAL	$	

END OF ADDENDUM NO. 1

EXHIBIT A

LOS ALTOS HILLS
CALIFORNIA

A PROPOSAL FOR
2014 SANITARY SEWER SYSTEM OPERATIONS AND MAINTENANCE

MAY 27, 2014

WEST BAY

EXHIBIT A

I. Introduction

West Bay Sanitary District (West Bay) is pleased to submit this proposal for Sanitary Sewer System Operations and Maintenance Services for the Town of Los Altos Hills.

We are proposing a team of veterans who have spent their careers advancing their knowledge of sewer and pump station collection system maintenance.

This team is committed to continuous improvement and a high level of performance, as demonstrated by the successes that we have achieved at West Bay, as presented in this proposal.

In addition to a progressive maintenance strategy, we also bring expertise in computerized maintenance management systems, a fleet of new equipment and tools, and the ability to make pipeline and pump station repairs in-house.

Our combined team, approach, and resources are designed to improve system performance and support the Town's ability to continue the high Level of Service that you have been able to provide to your ratepayers.

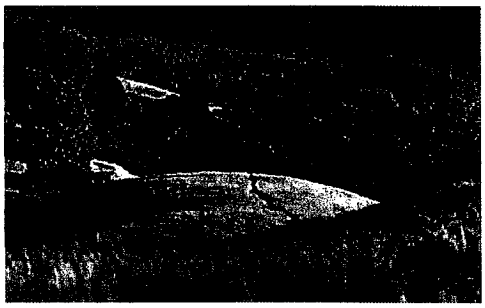

Table of Contents

I. Introduction
II. West Bay Sanitary District Resources
III. References
IV. Sewer System Management and Maintenance Experience
V. Our Approach to Common Maintenance Challenges
VI. Fleet and Equipment
VII. Staff Certifications
VIII. CMMS/GIS Software
IX. Task List and Proposed Cost
X. Acceptance of Town's Insurance and Indemnification Requirements
XI. Prevailing Wage Confirmation

EXHIBIT A

II. West Bay Sanitary District Resources

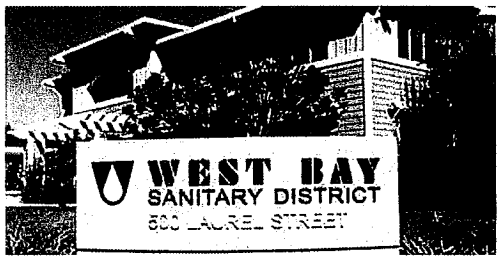

West Bay Sanitary District (West Bay), an independent Special District formed in 1902, provides wastewater collection and conveyance services to the City of Menlo Park, Atherton, and Portola Valley, and areas of East Palo Alto, Woodside and unincorporated San Mateo and Santa Clara counties. West Bay conveys raw wastewater to Silicon Valley Clean Water (formerly South Bayside System Authority) for treatment and discharge to the San Francisco Bay,

We are dedicated to protecting the public health and the environment by providing cost effective sanitary sewer service for approximately 207 miles of pipelines, 12 pump and lift stations, and 58 STEP/Grinder pump systems.

The Town of Los Altos Hills is seeking proposals for operations and maintenance of approximately 40 percent of the 56-mile sewer system, including two pump stations, for a 12-month period. These services also include SSO response for the entire sewer system. Pipes are predominantly comprised of 6-inch diameter, vitrified clay pipe within the public right-of-way and private easements. Flows are conveyed to the City of Palo Alto Regional Water Quality Control Plant.

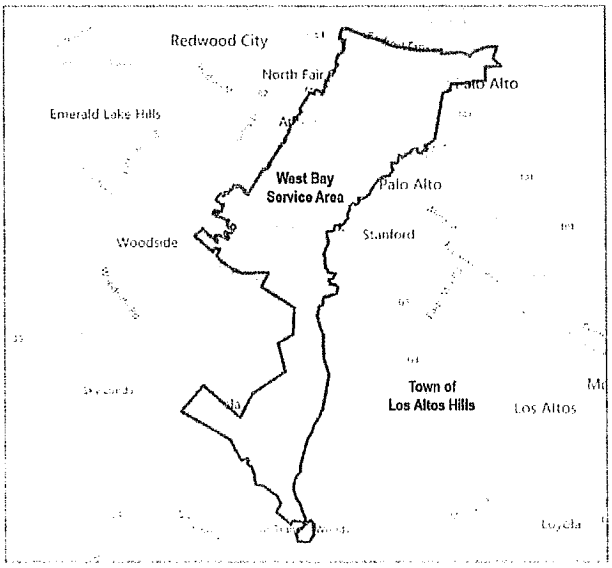

West Bay Sanitary District will provide the same excellent Level of Service to the Town as it provides to the current service area, which is adjacent to the Town.

II. West Bay Sanitary District Resources (cont'd)

Our proposed Project Manager is **Sergio Ramirez**. Sergio is West Bay's Maintenance Superintendent, and holds a Grade IV certification in Collection System Maintenance. He has over 20 years of experience managing and maintaining sewer collection systems and lift stations.

Sergio will be supported by a team of experienced maintenance staff, as shown in the organizational chart below. Additional staff qualifications are included in Section 2 - West Bay Sanitary District Resources.

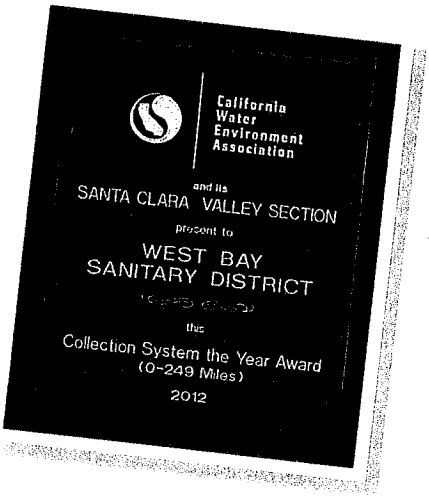

Project Manager Sergio Ramirez has led West Bay, as well as his prior employer, Castro Valley Sanitary District, to obtain the Collection System of the Year award from the California Water Environment Association

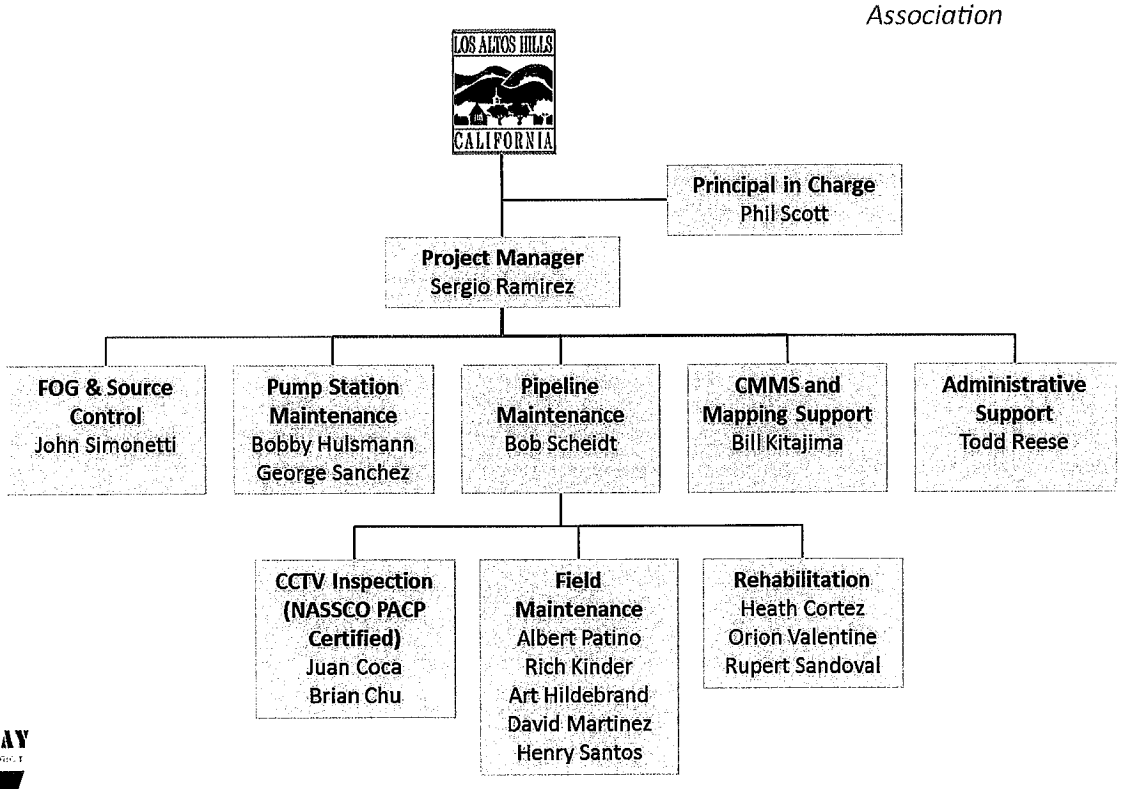

The full listing of the West Bay team's certifications and awards is provided in Section VII. Additional information about West Bay can be found at www.westbaysanitary.org.

II. West Bay Sanitary District Resources (cont'd)

Our Team

As shown on the organization chart on Page 2, we propose the following key members of our team to provide maintenance services to the Town:

Project Manager: Sergio Ramirez

Sergio is the West Bay Maintenance Superintendent and is a natural leader in our organization. His experience has grown through work as a private sewer maintenance provider, and as an employee of Castro Valley Sanitary District, and the City of Foster City, before joining West Bay in 2010. Sergio is active in CWEA, and currently serves as the Director for the Santa Clara Valley Section.

Education: Public Administration, Management and General Education course work at Chabot College, Hayward CA, 1998-2002; City of San Mateo Supervisor's Academy 2010

Licenses/Certificates: California Water Environment Association Director, Santa Clara Valley Section (2014); CWEA Collection System Maintenance Grade IV; CWEA Collection Person of the Year award in 1998 and Supervisor of the Year award in 2003.

Responsibilities: Sergio will manage day-to-day Operation and Maintenance activities, including cleaning, CCTV inspection, root control as desired by the Town, and as-needed oversight of construction and rehabilitation activities. Sergio will also manage the team, budget, equipment, and emergency response. Key responsibilities include review of daily work, results, and productivity; addressing calls from the public; and planning mid-range and long-range work. Sergio is an experienced supervisor with strong communication skills.

Principal in Charge: Phil Scott

Education: University of Phoenix, Pleasanton Campus Bachelor of Science (B.S.) in Business Management

Licenses/Certificates: California Water Environment Association Vice President (2014); CWEA Collection System Maintenance Grade IV; California Department of Public Health Water Distribution Operator D4; California Department of Public Health Water Treatment Operator T2. Led the City of Burlingame to receive the CWEA Santa Clara Valley Section Collection System of the Year award in 2006.

Responsibilities: Phil serves as the West Bay Sanitary District Manager, and will provide general manager expertise in all aspects of West Bay's services to the Town of Los Altos Hills. Phil is skilled at improving sewer system performance within a limited budget, and extends this same commitment to the Town.

II. West Bay Sanitary District Resources (cont'd)

Pipeline Maintenance Lead: Bob Scheidt

Sergio will be supported by Bob Scheidt, who is the West Bay Assistant Maintenance Superintendent. Bob will lead the pipeline team, including cleaning, rehabilitation, and field response. He will also serve as the acting Maintenance Superintendent when Sergio is not available for routine or emergency response.

Pump Station Specialist: Bobby Hulsmann

Education: Certificate in General Supervision, Skyline College

Licenses/Certificates: CWEA Grade III, Mechanical Technologist; CWEA Grade I, CS Maintenance

Responsibilities: Bobby is the West Bay Pump Facility Supervisor. He worked many years with a private pump servicing company and the City of San Mateo, prior to joining West Bay. Bob will lead the Town's pump station activities. He recently won the 2013 CWEA Electrical and Instrumentation Person of the Year award.

CMMS and Mapping: Bill Kitajima

Education: Bachelor of Science in Mathematics with a concentration in applied mathematics, California Polytechnic State University, San Luis Obispo, CA

Responsibilities: Bill is the Projects & IT Manager for West Bay. He will provide database, mapping, and Computerized Maintenance Management System (CMMS) support for the project. He is skilled at GIS applications, and manages the West Bay Lucity database, as well as the West Bay capital improvement program.

Source Control: John Simonetti

Education: College course work in electrical systems; certificate in diesel technology

Licenses/Certificates: CWEA Environmental Compliance Grade I; Safety Management Certificate

Responsibilities: John is the Regulatory Compliance officer for West Bay and will assist the team in managing fats, oils, and grease control within the sewer system as required. He will also serve as the project Safety Officer. John has additional support from Du-All Safety for writing safety programs, SOPs, conducting investigations and providing safety training for staff.

III. References

Agencies are trying to do more with less, and it is clear that this approach can be successful only if agencies are able to collaborate with others to fill in needed gaps in operations and maintenance. In 2013, as part of development of the West Bay Strategic Plan, the West Bay Sanitary District Board determined that providing shared and contract services with neighboring agencies should be a priority.

Our team is in full agreement with the Board's objectives. As leaders in the wastewater collection system community, we are actively seeking opportunities for contract maintenance. We are currently providing stormwater and sewer cleaning services to the Town of Los Altos Hills, sewer cleaning services to East Palo Alto Sanitary District, and stormwater cleaning services to the City of Menlo Park.

We are proud of our O&M approach, work ethic, and our leadership in the community. We encourage you to contact the references below to learn more about our team members and their contributions to the wastewater community.

Project Manager: Sergio Ramirez

Jacob Asfour, Maintenance Superintendent, Town of Los Altos Hills
(650) 941-7222 / jasfour@losaltoshills.ca.gov

Lenny Rather, Maintenance Supervisor, Oro Loma Sanitary District
(510) 481-6977 / lrather@oroloma.org

Elliott Johnson, Inspector, Union Sanitary District
(510) 335-2399 (cell) / elliott_johnson@unionsanitary.com

Paul Louis, Owner, Louis Consulting
(925) 788-8884 / plouis5481@aol.com

Pump Station Specialist: Bobby Hulsmann

Bob Correa, Public Works Supervisor, City of San Mateo
(650) 522-7354 / bcorrea@cityofsanmateo.org

Project in Charge: Phil Scott

Mike Brinton, Interim Director of Public Works, City of Ceres
(209) 538-5739 / Michael.Brinton@ci.ceres.ca.us

Andy Morrison, Wastewater CS Manager, USD
(510) 477-7542 / Andy_Morrison1@unionsanitary.org

III. References (cont'd)

In addition, we ask you to review the West Bay Sanitary District Annual Performance Measurement Report, which is found on our website:

http://s3.amazonaws.com/wsbd_production/resources/11091/MASTER_WBSD_2013-Performance-Measurement-Report_FINAL_3.31.2014.pdf

The Performance Measurement Report tracks West Bay progress against established objectives that follow the WaterEUM (a national group of water and wastewater organizations in collaboration with the EPA) Elements of Effective Utility Management:

- Product Quality
- Customer Service
- Employee and Leadership Development
- Resource Optimization
- Financial Viability
- Infrastructure Stability
- Operational Resiliency
- Community Sustainability
- Stakeholder Understanding and Support

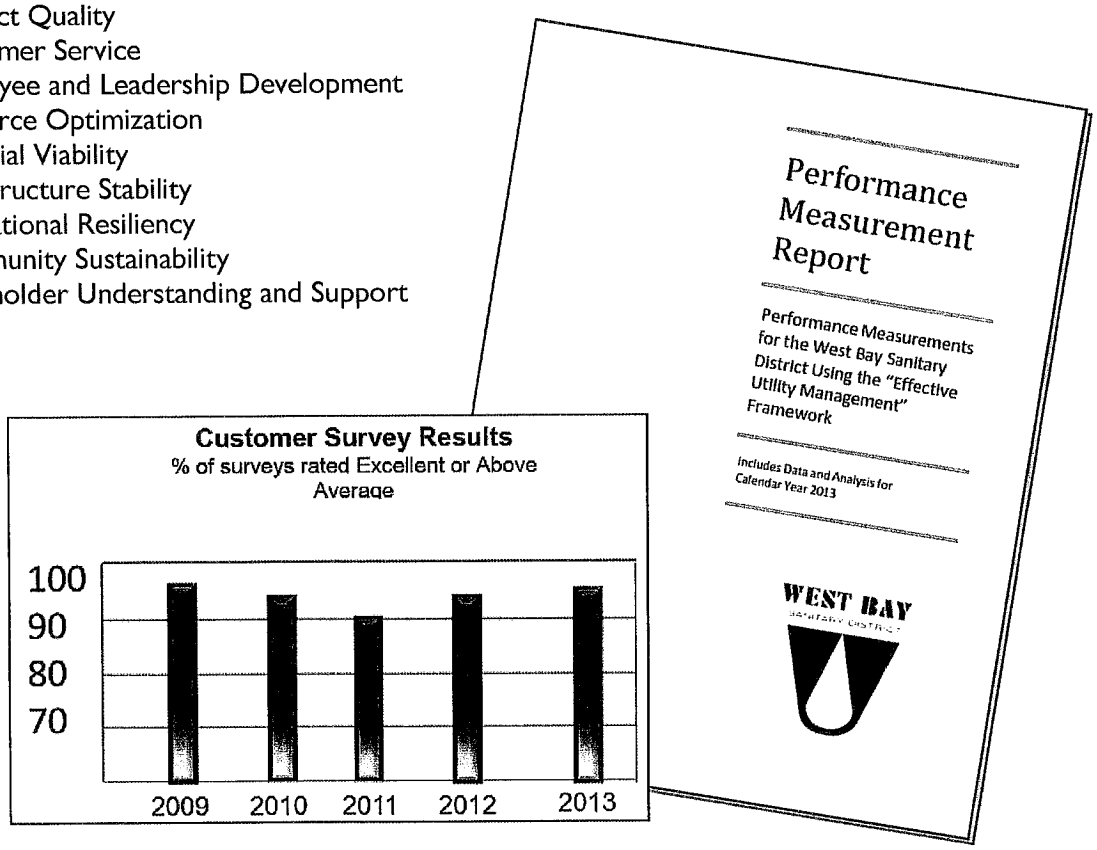

IV. Sewer System Management and Maintenance Experience

West Bay has operated and maintained its wastewater collections system for over 110 years. Our proposed team members have significant experience leading Bay Area agencies in the maintenance of wastewater collection pipes and pump stations. To supplement our staff resources, we have replaced or augmented our equipment and tools over the past five years with state-of-the-art cleaning and inspection technology. West Bay maintains a mechanical shop where we store sufficient spare pipes and pumps to address emergency needs, and where we also rebuild pumps on a routine basis.

Our expertise is described further below. If selected, West Bay will incorporate the Town's public sewer system and two lift stations into its own Preventive Maintenance Program and High Frequency Cleaning schedule. The Town's gravity public sewer system, lift stations and community will receive the same priority and high level of service as the West Bay facilities.

Pipeline Cleaning

Pipes are cleaned using our combination hydrojet-vacuum truck, using a variety of tools such as the Warthog, Chain Flail, SuperNova Chain Flail, Root Saws, and Sand nozzles. West Bay also employs the use of Spartan Sewer Cleaning Machines, Electric Eel sewer cleaning machines, Rodding machines and hand rods where access is limited or where mechanical methods may cause damage to existing pipes.

To supplement hydro-jet and machine rodding, West Bay still hand rods in locations that are inaccessible to other equipment.

The entire system is cleaned on a three-year maintenance schedule with a higher frequency schedule (i.e., 3-, 6-, or 12-month cleaning) assigned to specific pipe segments that have SSOs or known maintenance issues. The matrix on page 3 of this section shows the progressive cleaning approach that enables West Bay to continually adjust priorities. Cleaning schedules and results are stored in the West Bay Computerized Maintenance Management System (CMMS), developed using Lucity software. We store and proactively utilize an abundance of information in the CMMS, and continuously improve system maintenance activities using this tool.

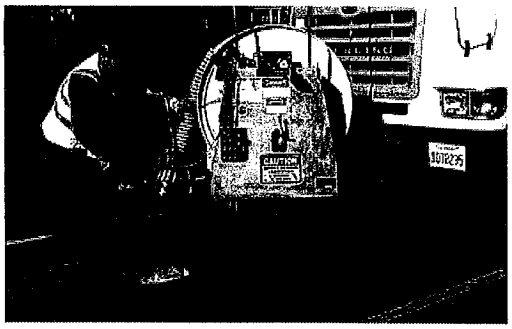

IV. Collection System Maintenance Experience (cont'd)

Regarding SSOs, West Bay conducts a Post Spill Assessment (PSA) on every mainline section where an SSO has occurred, and televises the pipe within two (2) working days of the SSO. The District has a "Find It-Fix It" policy for SSOs. Review of the CCTV assessment determines whether a High Frequency schedule is assigned to the mainline section, a Point Repair is scheduled, or rehabilitation is scheduled via the Capital Improvement Program. Following this process, we have prevented repeat SSOs, and have decreased SSOs from all causes as shown below.

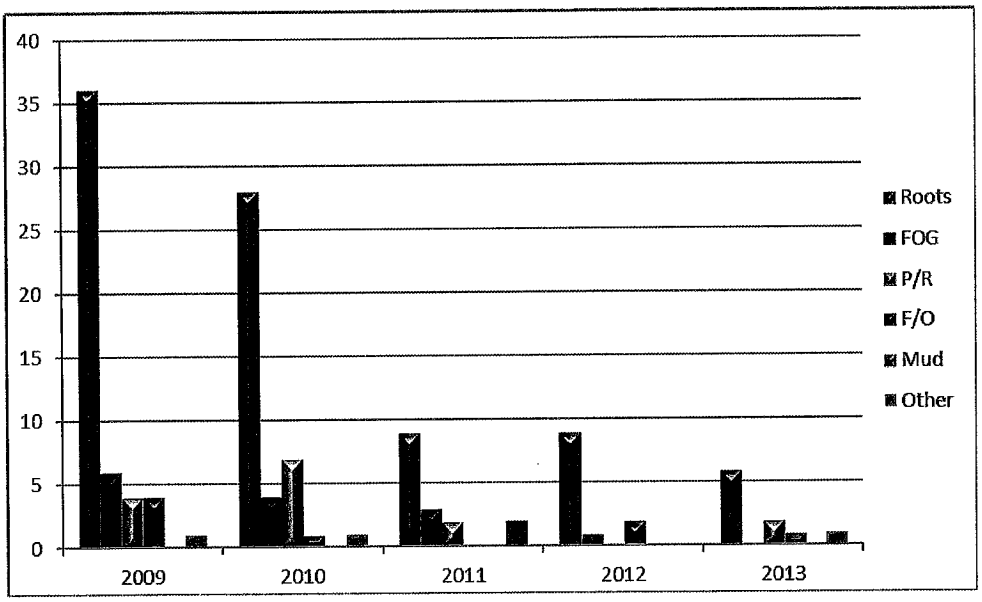

Using our "Find it - Fix it" approach, we have controlled repeat SSOs and have systematically reduced SSOs from all causes

CCTV Inspection

West Bay crews own two fully-equipped CCTV inspection vans and complete CCTV inspection of the collection system on a five (5) year cycle. In addition to inspection of existing pipelines, West Bay performs CCTV inspection on newly installed pipelines, and pipelines that have experienced SSOs. CCTV data in National Association of Sewer Service Companies (NASSCO) Pipeline Assessment & Certification Program (PACP) format is stored in the West Bay CMMS. West Bay also CCTV inspects several lines per month as part of its Quality Control program, to verify that sewer mains have been adequately cleaned. **All of our CCTV field staff are NASSCO PACP certified.**

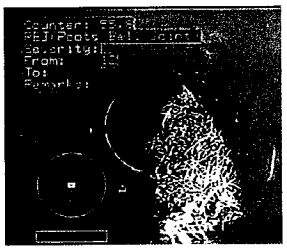

West Bay follows a 5-year inspection cycle, and also uses CCTV for post-SSO evaluations and pipe cleaning QA/QC.

IV. Collection System Maintenance Experience (cont'd)

Example Progressive Cleaning Matrix (as described earlier in this section)

	Clear	Light	Moderate	Heavy
Debris	No observable debris	Minor amount of debris 1-2 passes	Moderate amounts of debris 3-4 passes	Significant amounts of debris More than 4 passes Operator concern for future stoppage
Grease	No observable grease	Minor amounts of grease - 15 minutes or less to clean 1-2 passes	Small "chunks" No "logs" – 15 to 30 minutes to clean 3-4 passes	Big "chunks" or "logs" More than 4 passes Operator concern for future stoppage
Roots	No observable roots	Minor amounts of roots 1-2 passes	Thin stringy roots - No "clumps" 3-4 passes	Thick roots Large "clumps" More than 4 passes Operator concern for future stoppage
Debris: Structural pipe fragments soil, rock, etc.	No observable materials	Specify material (if possible). Minor amounts of material	Specify material. Moderate amounts of material per line segment.	Specify material Significant amounts of material per line segment. Operator concern for future stoppage
Action	Decrease frequency to next lower frequency after 2 clear results (e.g. 6 months to 12 months	Continue current maintenance frequency	Increasing current maintenance frequency to next higher frequency (e.g. 6 months to 3 months). Submit follow up for CCTV assessment.	Increase current maintenance frequency to next higher frequency (e.g. 6 months to 3 months). Submit follow up for CCTV assessment.

Our cleaning approach includes collection and monitoring of cleaning data. We adjust cleaning frequencies based on this information, to make sure that high frequency cleaning occurs where it is needed, and clean pipes don't get unnecessarily re-cleaned. This process improves cleaning efficiency and reduces cost.

IV. Collection System Maintenance Experience (cont'd)

Pipeline Repairs

An important part of controlling sanitary sewer overflows within the collection system is to have the ability to make point repairs when significant pipeline defects are found. In addition to digging up and replacing damaged pipe sections, since 2010, the District has used a trenchless pipe repair method called "Pipe Patch". Pipe Patch works much like a stint, adding support to the wall of the pipe from the interior and sealing off joints and cracks from roots and groundwater intrusion.

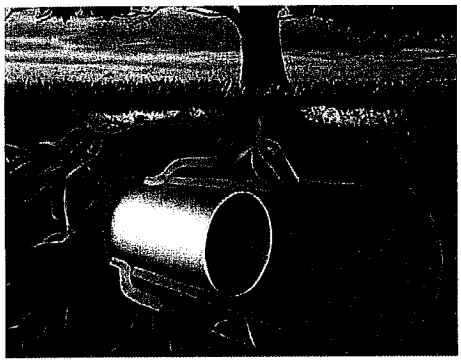

West Bay uses non-destructive repair methods in locations where dig-ups are not required, or are not feasible.

The District's Pipe Patch equipment, materials, and expertise are available to the Town upon request.

Other Pipeline Preventive Maintenance Activities

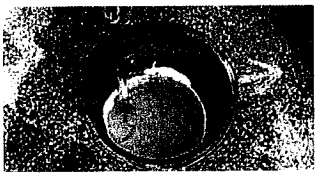

Root Foaming: By implementing a root foaming program for approximately 25 percent of our system, West Bay has eliminated SSOs in some neighborhoods almost entirely. We are fortunate to have secured excellent pricing for this service, which is provided by Duke's Root Control. As part of our services, and if desired by the Town, West Bay will extend this pricing to the Town.

Source Control: The best place to address the issues that could create SSOs in the system is at the source. West Bay's service area hosts a number of food service establishments, as well as residents that have historically disposed of fats, oils, and grease (FOG) through the kitchen sink drain. In 2013, through aggressive outreach and a dedicated source control program, West Bay had no SSOs related to FOG.

Disposal of other items, in addition to FOG, are of growing concern. For example disposable wipes are increasing as a contributor to blockages and SSOs, and are also difficult to manage during the wastewater treatment process. In addition to FOG outreach, our staff also actively educate our communities about the proper disposal of these and other deleterious items. This program can easily be extended to the Town's community if desired.

IV. Collection System Maintenance Experience (cont'd)

SmartCover® Technology: A valuable component of our operating strategy has been the use of SmartCovers. SmartCovers have an electronics package attached to the underside of the manhole cover that set off an alarm when flow rises above normal levels (or the manhole cover is opened). We have located the units in easements that are difficult to access, or are close to a waterway, requiring rapid response. To date, these devices have prevented twenty-six potential SSOs. As an optional service West Bay could recommend strategic placement of Smart Covers in the Town, and then monitor activity as measured by the devices.

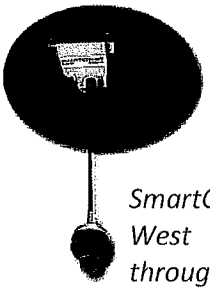

SmartCovers have helped West Bay avert 26 SSOs through early alarms that led to preemptive cleaning.

Pump Station Maintenance

West Bay performs regular inspections and maintenance of twelve (12) publicly-owned Pump/Lift stations. In addition, West Bay maintains private pump stations consisting of 40 residential grinder pump systems and 18 Septic Tank Effluent Pump Systems (STEP). Maintenance schedules for publicly-owned pump stations are performed twice per week while private pump stations are checked quarterly. All of the publicly-owned pump stations and privately-owned grinder pumps are continuously monitored using SCADA.

To streamline pump station maintenance, West Bay maintains an inventory of spare pumps, electrical parts and instrumentation for pump station maintenance to minimize downtime and maximize reliability. Over the last several years, West Bay has experienced no down time at pump stations due to this proactive maintenance and reliability program.

West Bay experienced no down time at its 12 pump and lift stations in 2013, in part to a forward-looking approach toward inventory management

EXHIBIT A

V. Collection System Maintenance Challenges

To supplement the information in this proposal, we have highlighted in this section information related to specific maintenance challenges. Our team members encounter and address collection system challenges on a daily basis. The following examples show our expertise in providing cost effective solutions to four common challenges that are encountered by West Bay:

- Addressing Regulatory Compliance
- Providing Timely and Effective Emergency Response
- Addressing Odor Control
- Maintaining Positive Interactions with the Public

Challenge 1: Addressing Regulatory Compliance
Solution: A Proactive Maintenance Approach Protects the Town from Regulatory Scrutiny

We have first-hand experience facing regulatory scrutiny, and clearly understand how a system must be managed to meet regulatory requirements. In 2008, after years of deferred maintenance, West Bay reported 55 SSOs, which was equal to approximately 26 SSOs per hundred miles of pipe. As a result, the District was sued by San Francisco Baykeeper for violations of the Clean Water Act. However, unknown to Baykeeper, the District had begun to make positive change in its maintenance practices. This change was accelerated under the leadership of Phil Scott and our proposed team. By the time discussions with Baykeeper ended in 2011, SSOs had been reduced by over 70 percent and the District and Baykeeper agreed to settle the issue **without the need for a Consent Decree**.

Through a progressive collection system maintenance program, our proposed team reduced West Bay Sanitary District SSOs by 82% in five years, avoiding costly regulatory actions.

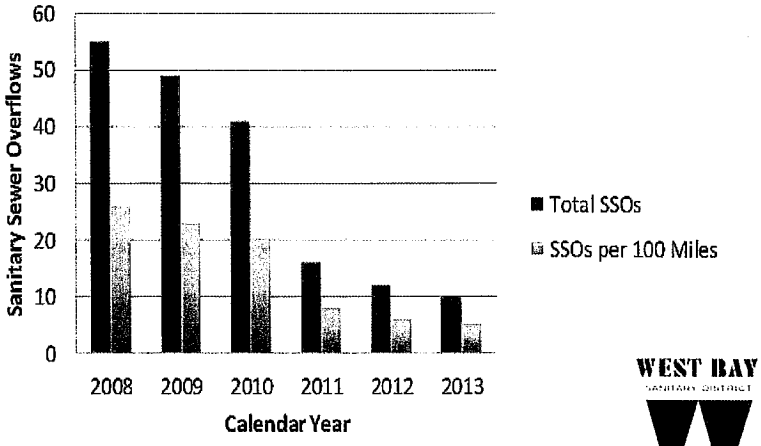

V. Collection System Maintenance Challenges (cont'd)

There is no silver bullet to improving sewer system performance. Achieving this success requires the following actions, which we have integrated into our approach.

- Proactive cleaning and inspection strategies
- Clear productivity goals, reinforced with work product quality assurance
- Frequent employee training
- Reliability, modern equipment
- Strategic pipeline replacements involving conventional and trenchless technologies

Challenge 2: Providing Timely and Effective Emergency Response

Solution: Readiness is the Key to Rapid Field Response

West Bay prides itself on our response time to calls. In the last few years, in addition to reducing SSOs, we have cut response time in about half. After-hours response time to SSOs in calendar year 2010 was approximately 50 minutes. Within this time, the on-call employee would get the call, drive to work, pick up the emergency response vehicle, and drive to the site. This process did not leave enough time to call in extra resources and perform reporting in the timeline required to mitigate and report a Category I SSO.

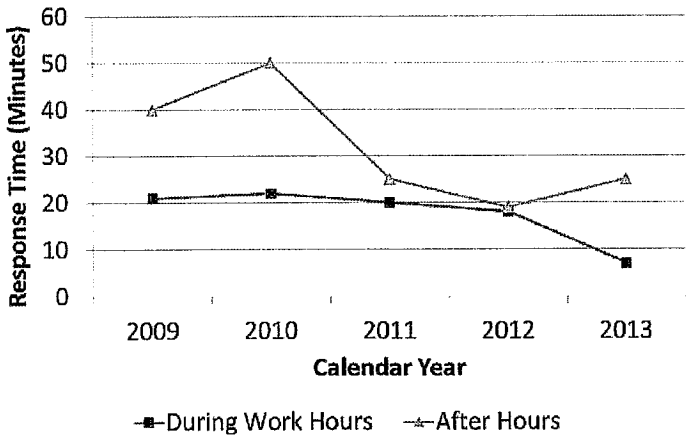

Simple yet effective process changes allowed West Bay to reduce after-hours response time by over half. Our staff are committed to rapid response and extend this commitment to the Town.

In 2011, Phil Scott implemented a simple process change, allowing the on-call employee to take the emergency response vehicle home and drive it directly to the site during a call-out. This new process reduced the after-hours call-out response time by more than half. The average response time for after-hours service in 2013 was **27 minutes**, which includes service to the Portola Valley, adjacent to the Town's service area.

V. Collection System Maintenance Challenges (cont'd)

Challenge 2: Timely and Effective Emergency Response (cont'd)

SSO response is our first priority, and all of our staff, including our proposed team members, are trained and paid to respond to emergencies, including 24/7 response to sewer system emergencies.

West Bay has developed a comprehensive Sewer System Management Plan (SSMP) and Overflow Emergency Response Plan (OERP) that are available through our website at the url: http://westbaysanitary.org/education/what-we-do/ssmp

We have a fleet of dedicated SSO response vehicles and equipment, including a First Responder truck and jet-vac combo cleaner, trailer-mounted bypass pumping equipment, and a ditch witch vacuum excavation and clean up trailer.

Our team is well versed in SSO response, containment, cleanup, sampling, and reporting. We are trained in the SSO estimating procedures and other response activities that are used throughout industry and supported by the Town's OERP provider, DKF Solutions. We will follow the Town's OERP, and will also integrate key aspects of West Bay's SSMP and OERP response procedures, where these procedures further improve service.

Challenge 3 Addressing Odor Control

Solution Proactive and Environmentally Safe Solutions Make Good Neighbors

West Bay has few odor complaints from its 12 pump stations, and sewer collection system – less than five per year. However, when odor complaints are received, West Bay crews respond with an on-site investigation and improvements, if needed.

WEST BAY

V. Collection System Maintenance Challenges (cont'd)

For example, we have been working with an isolated odor issue at the Corte Madera pump station in Portola Valley. This station is located next to a creek and directly adjacent to a residence in a heavily wooded, bucolic neighborhood. West Bay needed to find an odor control solution that did not add unsightly equipment, and could be implemented in a small footprint. As a result, we are now dosing the pump station with Helix-Commander™ odor control product to control the odors through management of the H_2S vapors which create these odors. The effectiveness of this odor control approach is measured regularly with the West Bay OdaLogger Unit.

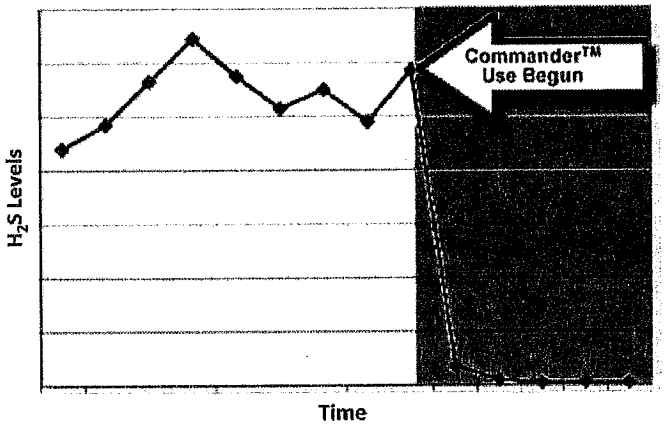

After studying the options available to control odors from this neighborhood pump station, West Bay found success with the Helix Commander™ product, which is easy to use, cost effective, and non-hazardous.

Challenge 4: Maintaining Positive Interactions with the Public

Solution: Proactive and Environmentally Safe Solutions Make Good Neighbors

West Bay places high priority on responding to customer complaints about sewer service. Complaints are generally related to sewer stoppages, overflows, or, less frequently, odors. Response is performed by the field crews during work hours and the on-call staff member during non-working hours. Response includes making a field assessment of the complaint and taking necessary action(s) required to resolve the problem. Increased preventative maintenance may be implemented if the problem is mainline-related to minimize recurrence of the issue.

V. Collection System Maintenance Challenges (cont'd)

Challenge 4: Maintaining Positive Interactions with the Public (cont'd)

West Bay is an integral part of the community. For example, we are a proud sponsor of the Diaper Derby at the City of Menlo Park Chamber of Commerce Block Party.

We establish specific objectives in terms of response time, and distribute a customer feedback form after each response activity to collect information and learn from each customer interaction. Our customer survey process extends beyond these interviews and also considers factors such as the nature and accuracy of newspaper articles.

Our employees know that their performance is in part evaluated based on how the public perceives the agency. In this way, customer feedback is an effective tool in maintaining our quality of service.

Good service starts with the a positive first impression. Our Sewer maintenance crews are proud of their system and their work, and this pride shows in their presentation and attitude.

EXHIBIT A

VI. West Bay Fleet and Equipment

As a fully operational maintenance organization that is dedicated solely to wastewater collection system maintenance and management, we own and maintain a full fleet of vehicles and equipment. Our range of equipment allows us to service lines in hard-to-reach easements and locations, through both flushing, rodding, and even hand-rodding in the most difficult locations.

We are proud of our fleet, which is summarized below. Since we plan to integrate the Town's system into the West Bay maintenance schedules, all of the equipment shown will be available for use in maintaining the Town's sewer system.

We have systematically replaced our vehicles to assure that we have the most current technology. Most of the equipment described is less than 5 years old.

Summary of West Bay Fleet and Equipment:

- Pipe cleaning vehicles: combination jet-vac unit; trailer jetter; hydro jetter; and power rodder
- 2 CCTV inspection trucks (as of May 2014)
- 15 vehicles (from automobiles to fully equipped service truck, truck with jetter nozzle, dump truck, and one truck-mounted 3-ton crane)
- Additional construction tools and equipment, sufficient for completing small dig-and-replace repairs of the sewer system.

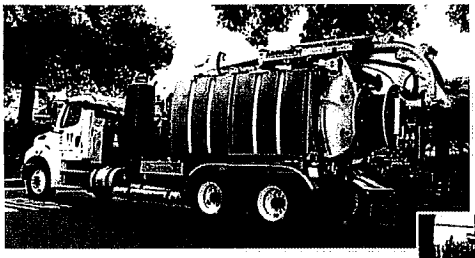

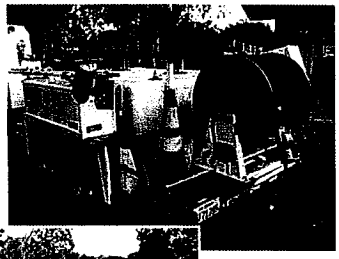

West Bay has a range of cleaning options to address pipes in different settings.

VI. West Bay Fleet and Equipment (cont'd)

Inspection and repair vehicles allow cost effective small repairs, including immediate repairs needed to address SSOs.

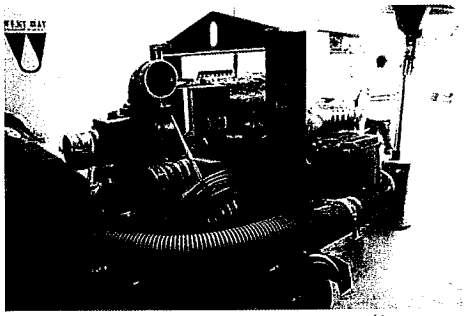

SSO response is our first priority, and West Bay maintains a dedicated SSO response truck, trailer, and bypass pumping equipment truck for effective response.

WEST BAY

VI. West Bay Fleet and Equipment (cont'd)

Vehicles (Unit Number and Model Year)

Vehicle ID	Description
205	2012 Combo Unit (Aquatech)
201	2013 Cmax
216	2014 CCTV Unit
208	2014 Ford F350 2X4 (Service Truck)
213	1999 Ford Ranger Pickup (Source Control)
218	2007 US Trailer Jetter
212	2004 F450 Utility Truck (Assigned to Trailer Jetter)
204	2004 Power Rodder (Sreco)
207	2005 Ford Explore 4x4 (Projects Manager)
211	2008 Ford Escape (Construction Inspector)
209	2008 F550 Super Duty (Rehabilitation Crew)
202	2008 Ford Escape (Assistant Superintendent)
220	2012 New 1/2 inch Jetter on F550 4x4
203	2009 Sterling LT8500 Dump Truck
217	2011 F-350 Extended Cab w/ Utility Bed and 3 Ton Crane
214	2011 Ford F250 (Source Control)
210	2012 Ford Super Duty (Pump Truck)
206	2012 Ford Expedition (Superintendent's Vehicle)
219	2008 Traffic Control Unit
215	2003 International Hydro (SRECO) Jetter

For equipment list, see next page.

VI. West Bay Fleet and Equipment (cont'd)

Equipment (Year and Description)

Year	Description
1994	Case Backhoe 58 Super K 4x4
1989	Extend A Jet (1" easement cleaning unit)
2001	Bobcat Model 873 Loader
2011	Concrete Saw Trailer (5x10)
2006	Dynapac Asphalt Roller
2006	Ingersoll Rand Compressor/Generator
2002	Zieman Trailer (Backhoe)
2005	6" Bypass Pump
2009	Carry All Confined Space Trailer
2011	Concrete Saw
2011	6" Gorman Rupp Pump
2011	Bypass Trailer
2011	Pipe Patch Trailer
2012	Jack Hammer Attachment for Bobcat
2012	Message Traffic Arrow Board

VII. Staff Certifications

Our staff are highly certified, and are rewarded for continuing their professional development. Our team members are also heavily involved in California Water Environment Association (CWEA). Through our contacts in this leading organization, we have access to a wide range of resources and solutions to help improve operations.

West Bay is also the Lead Agency in a grassroots effort called the Collection System of the Future. Through this project, nine Bay Area agencies have come together, and over the next year, will brainstorm and find common solutions to our highest priority agency management challenges. If selected, West Bay will share the lessons learned from this important effort with the Town of Los Altos Hills.

California Water Environment Association Certificate Holders

Certificate	Employee	West Bay Position
Grade IV	Beyer	Source Control Inspector (and Environmental Compliance Inspector Grade I)
Grade I	Brown	Construction Inspector
Grade II	Chu	Pipeline Inspection Tech *
Grade III	Coca	Field Supervisor *
Grade I	Cortez	Rehab Field Supervisor
Grade II	Hildebrand	Maintenance Worker
Grade I	Hulsmann	Pump Facility Supervisor (and Mechanical Technologist Grade III)
Grade II	Martinez	Maintenance Worker
Grade I	Patino	Field Supervisor
Grade I	Praturlon	Source Control Inspector
Grade I	Sanchez	Pump Maintenance Mechanic (Grade is held in Mechanical Tech)
Grade I	Santos	Maintenance Worker
Grade I	Simonetti	Regulatory Compliance Inspector
Grade I	Valentine	Rehab Technician
Grade IV	Ramirez	Maintenance Superintendent
Grade IV	Scott	District Manager

* NASSCO PACP Certified

VII. Certifications (cont'd)

CWEA Committee Involvement

- **Jed Beyer**, Santa Clara Valley Section, Collection System Committee – Chair
- **Brian Chu**, CWEA Northern Safety Day - Liaison Affairs Support
- **Juan Coca**, Santa Clara Valley Section, Collection System Committee— Secretary and San Francisco Bay Section- Member
- **Sergio Ramirez**, Santa Clara Valley Section- Board Member and San Francisco Bay Section -Past Chair
- **Phil Scott**, CWEA Board President Elect, Former CWEA Treasurer, Richard D. Pomeroy recipient, Golden Manhole recipient
- **John Simonetti**, CWEA 2nd Year Director of State Safety Committee, Northern Safety Day Conference Committee Co-Chair, Santa Clara Valley Section Safety Committee Co-Chair

In addition, District staff have various affiliations with **CASA, BACWA, ABAG, CSDA, and WEF**

VIII. CMMS / GIS Software

The District has used the Lucity software package (formerly known as GBA Master Series) for its Computerized Maintenance Management System (CMMS) since 2002.

The Lucity network is linked to the District's GIS maps, developed using ESRI software, through common manhole and pipe ID numbers. The town can readily view all Lucity data through maps generated through GIS. When CMMS data changes, a refresh of the GIS map will display the updated information. Each GIS layer's attribute table provides the information in database format, reflecting the data as it is stored in the Lucity software.

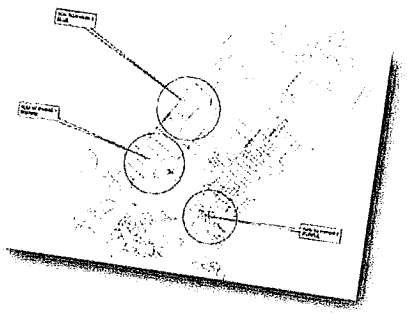

Lucity integrates GIS and the CMMS to develop preventive maintenance tools such as this root foaming map.

Due to their size, sewer inspection videos are stored on a separate server. The user is linked to the server and associated file through Lucity. However, videos are only accessed "real-time" from the office, and must be downloaded in advance for use in the field. CCTV logs, summaries, and other information are manageable in size and stored directly in the Lucity database.

Lucity as a Progressive System Management Tool

Field tablets streamline data collection and reduce user issues found when manually updating the CMMS.

All asset information, cleaning, CCTV inspection, facility inspections, pipeline rehabilitation and replacement activities and results, and SSOs are logged into Lucity. The District uses this new data on a continuing basis, through pre-established decision trees, to refine and improve system management.

In addition to the desktop license, the District also uses tablets to capture work order data from the field. Critical asset data is available on field staff's mobile tablets during maintenance, repairs, and response activities. Field crews also input information directly onto forms that are stored within each tablet, eliminating the need for paper, and for transcribing information from paper to the computer. In this way, crews save time and reduce errors in data management. The data is uploaded back to the server at the end of each work shift.

Additional information on Lucity software options is provided through their website: http://www.lucity.com

EXHIBIT A

IX. Task List and Proposed Cost

The tasks and costs that are presented in the table on the following page follow the Scope of Work that is included in the Town's Request for Proposals. These services closely reflect the manner in which West Bay conducts maintenance on its system. Our crews are already in your neighborhood, providing service to the adjacent community of Portola Valley, and some parcels in Santa Clara County. Our day-to-day activities can be easily extended to serve the Town.

West Bay proposes to implement this scope in a manner that provides flexibility for adjustment mid-way through the maintenance cycle. In this way, services can be tailored better to meet the Town's needs. We believe that through this process, we will provide the needed services at a lower overall cost to the Town.

Our proposed implementation schedule is shown in the figure below.

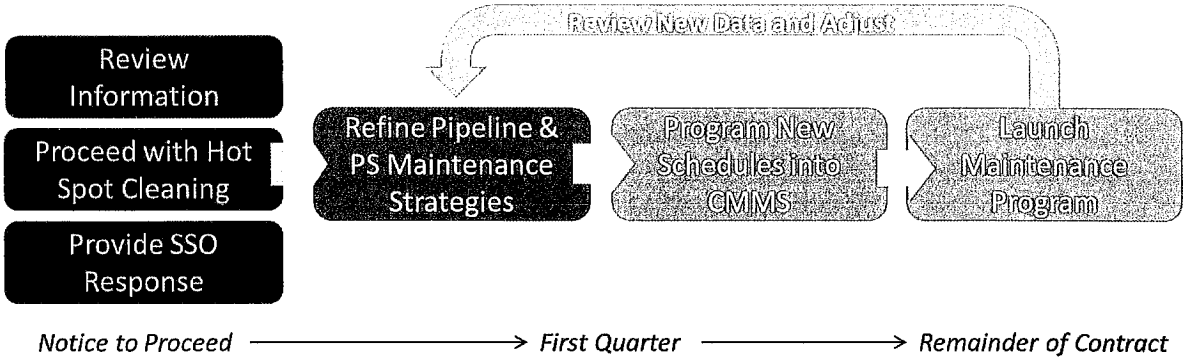

EXHIBIT A

IX. Task List and Proposed Cost (Cont'd)

Task	Description	Unit Cost	Quantity	12-Month Cost
Bid Item No. 1. Pump Station Maintenance	West Bay will perform maintenance on the Town's two pump stations following the schedule outlined in the RFP and provide 24-hour emergency response. Pump station maintenance includes wet well cleaning twice annually, and degreaser application as needed.	$1,670/mo	12 months	$20,040
Bid Item No. 2. Cleaning and Flushing in ROW	West Bay will clean sewer pipelines using our fleet of equipment and tools. **93,600 lf** of pipe within the public right-of-way will be cleaned, with approximately 20 percent of this pipe accessible from only one end. This effort includes development of a progressive cleaning strategy (to move pipes on and off of the hot spot list) using CMMS, and QA/QC of cleaning activities through CCTV inspection. Cleaning results will be included in the CMMS.	$0.92/lf	93,600 lf	$86,112
Bid Item No. 3. Cleaning and Flushing in Easements	West Bay will clean sewer pipelines in easements using our fleet of equipment and tools. **31,200 lf** of pipe will require cleaning, assuming all of the pipe is accessible from only one end. The progressive cleaning strategy described in Bid Item No. 2 will include these pipes. Results will be included in the CMMS.	$1.31/lf	31,200 lf	$40,872
Bid Item No. 4. CCTV Inspection within ROW	West Bay will complete CCTV inspection of **46,800 lineal feet** of pipelines that are accessible through both ends of the pipe (to allow access of a pan-and-tilt camera as required to meet NASSCO PACP standards). Structural and O&M condition ratings and defect codes that use the PACP standard will be entered into the CMMS system as part of this item.	$1.40/lf	46,800 lf	$65,520
Bid Item No. 5. CCTV Inspection within Easements	West Bay will complete CCTV inspection of **12,480 lineal feet** of pipelines that are accessible through both ends of the pipe within easements. Similar to Bid Item No. 4, CCTV results will be incorporated into the CMMS.	$1.80/lf	12,480 lf	$22,464
Bid Item No. 6. Response to SSOs with access from Right of Way	West Bay will follow the Town's Sewer System Management Plan and Overflow Emergency Response Plan in responding to and conducting initial reporting of sanitary sewer overflows. The Town will serve as the Legally Responsible Official (LRO). The Town's SSMP closely follows the West Bay SSMP, which requires response within 60 minutes from notification. Following the SSO, and subsequent CCTV inspection, West Bay will make recommendations as to follow-up actions, including identifying issues related to lateral connections. We consider SSO Avoidance and Response as the most critical components of our operating strategy, and are well trained to address SSOs of all sizes, at any time, as described further in Section V. This item proposes a "per-SSO" approach. West Bay agrees to complete SSO response at no cost to the Town if the SSO in question resulted from inadequate cleaning by West Bay up to six months prior to the SSO.	$1,200/SSO	6 SSOs	$7,200
Bid Item No. 7. Response to SSOs with access from Easements only	West Bay will provide SSO response and reporting for issues that occur within easements, following the approach described in Bid Item No. 6.	$1,380/SSO	6 SSOs	$8,280
Bid Item No. 8. Initial Setup and Database Transfer form CMMS and GIS Systems	West Bay will import the Town's CMMS data into Lucity CMMS software, and will develop at least six data collection forms in collaboration with the Town. This scope includes one seat license that is dedicated to the Town (includes Sewer module, CCTV module, Work Order module, GIS module, and Overflow module), and online access by the Town to its data. The CMMS and GIS shall provide access to the Town's CCTV data and hot spot maintenance schedules. This task includes generation of the initial Town hot spot list.	$24,500 Lump Sum	1 LS	$24,500
		Note: This bid item will be reduced to $5,500 if the Town decides to use the West Bay license in lieu of purchasing a new seat license.		
Bid Item No. 9. GIS Mapping Maintenance and Updates	West Bay will integrate new sewer system O&M information into the GIS maps on a monthly basis. This task includes maintenance of a change log and integration of other mapping updates as provided by the Town.	$125/hour	120 hours	$15,000
Bid Item No. 10. Monthly Management Reports	At the beginning of the project, we will develop a standard monthly summary format that includes the performance indicators that will be tracked and measured on a monthly and annual basis. These indicators will correlate closely to the measures that are described in Element 9 of the Town's SSMP. If these elements are not yet defined, we will assist the Town in developing a list that follows Regional Board expectations. The summaries will integrated progress made in pump station maintenance, and shall document any issues and recommendations to address these issues. This task includes the Town's biannual SSMP audit.	$350/month	12 months	$4,200
Bid Item No. 11. Sanitary Sewer Overflow Response for Private Laterals	West Bay will respond to SSOs related to private laterals, including determining ownership, notifying the owner of the issue, providing the owner with the Town's Sewer Spill Reference Plan, and entering information into the CMMS system.	$310/lateral	6 SSOs	$1,860
			Total	**$296,048**

- In addition, West Bay offers up to six point or spot repairs annually, and has provided example unit rates following this bid sheet.
- Pump station repairs will be completed on a time and materials basis, at a cost of $90/hour with a 2-hour minimum. Parts and materials will be provided at cost plus 10 percent.

EXHIBIT A

Example Unit Costs for Point and Spot Repairs

Unit Rates	
Labor:	
Maintenance Worker:	$102/hr
Rehab Tech:	$91/hr
Maintenance Worker:	$59/hr
Equipment:	
Backhoe	$25/hr
Roller	$10/hr
Utility Truck	$22/hr
Material: Cost plus Markup	

Open Trench Repair Estimate (Typical 5 foot Repair 6 feet deep)	
Labor:	$3,000
Material:	$600
Equipment:	$400
Total:	**$4,000**

PipePatch CIPP Repair Estimate		
Labor:		$700
Material:		
6x24 Patch Kit	$	400.00
6x48 Patch Kit	$	600.00
8x24 Patch Kit	$	500.00
8x48 Patch Kit	$	800.00
Equipment:		$200
Total:		
6x24 Patch	**$**	**1,300.00**
6x48 Patch	**$**	**1,500.00**
8x24 Patch	**$**	**1,400.00**
8x48 Patch	**$**	**1,700.00**

** Example Unit Costs for Optional Open Trench and CIPP Spot Repairs
(Actual Costs May Vary, Depending on Site Conditions)

EXHIBIT A

X. Acceptance of Insurance and Indemnification Requirements

West Bay has reviewed the Town's Insurance and Indemnification requirements as provided in the Request for Proposals, and we request addition of the following language to the end of Section 5 of the Town's agreement:

> Notwithstanding the foregoing, CONTRACTOR shall not be required by this Section 5 to indemnify, hold harmless or defend the TOWN for liability, including but not limited to fines or civil penalties imposed by regulatory authorities or non-governmental entities pursuant to the Clean Water Act or state law, that may arise if any part of the System fails, overflows, or otherwise causes damages or costs, provided that the failure, overflow, or other cause of the damage was not proximately caused by the Contractor's negligence in the performance of work specified by this Agreement. Examples of such failure, overflow or other problem include, but are not limited to: blockages that are proximately caused by facilities that are prone to root intrusion or blockages because they are beyond their useful life or improperly installed or damaged or degraded by roots, construction activities, earthquakes or settling; blockages caused by FOG build-up or other obstructions that could not be reasonably anticipated in a particular segment based on historic data; or blockages caused by acts of vandalism or contractor negligence ("Unexpected Events"). TOWN agrees to hold CONTRACTOR free and harmless and to indemnify CONTRACTOR and its officers, officials, employees and agents from all claims, demands, damages, liabilities, losses and costs of whatever nature arising from, connected with, or related to such Unanticipated Events, or that arise from or are proximately caused by TOWN's performance of work which is not included within the scope of this Agreement.

In addition, if West Bay is selected as the Contractor, we request that the Town amend the Agreement to reflect West Bay's participation in the CSRMA risk pool.

EXHIBIT A

XI. Prevailing Wage Confirmation

West Bay acknowledges that all personnel occupied in performance of the field work will be paid prevailing regional wages (classification Laborer Group 1B for Santa Clara County) and West Bay will provide certified payrolls to the Town upon request.

Prevailing Wages is defined as the sums set forth in the documents entitled "General Prevailing Wage Determination made by the Director of Industrial Relations pursuant to California Labor Code Part 7, Chapter 1, Article 2, Sections 1770, 1773, 1773.1 and 1776."

If selected, West Bay will keep a copy of the prevailing wage rates in each service truck.

Further, West Bay will comply with the provisions of California Labor Code Sections 1774 and 1775 concerning the payment of prevailing rates of wages to workers and the penalties for failure to pay prevailing wages.

EXHIBIT A

EXHIBIT A

West Bay Sanitary District

500 Laurel Street
Menlo Park, CA 94025

Phone: 650-321-0384
Fax: 650-321-4265
E-mail: sramirez@westbaysanitary.org

WEST BAY
SANITARY DISTRICT

For more information, visit our website

EXHIBIT B

CERTIFICATE OF COVERAGE

16-Jul-2014

PRODUCER

Alliant Insurance Services, Inc.
100 Pine Street
11th Floor
San Francisco, CA 94111 (415) 403-1400

THIS CERTIFICATE IS ISSUED AS A MATTER OF EVIDENCE ONLY AND CONFERS NO RIGHTS UPON THE CERTIFICATE HOLDER. THIS CERTIFICATE DOES NOT AFFIRMATIVELY OR NEGATIVELY AMEND, EXTEND OR ALTER THE COVERAGE AFFORDED BY THE MEMORANDUM(S) OF COVERAGE (MOC) BELOW.

THIS CERTIFICATE OF COVERAGE DOES NOT CONSTITUTE A CONTRACT BETWEEN THE ISSUING INSURER, AUTHORIZED REPRESENTATIVE OR PRODUCER, AND THE CERTIFICATE HOLDER.

INSURED West Bay Sanitary District
Member of CSRMA
500 Laurel Street
Menlo Park, CA 94025-
97

MEMORANDUM OF COVERAGE NUMBER

CSL WBSD 1314 1

PROGRAM AFFORDING COVERAGE

California Sanitation Risk Management Authority (C.S.R.M.A.)

COVERAGES

THIS IS TO CERTIFY THAT THE COVERAGE IS AFFORDED TO THE ABOVE NAMED MEMBER, AS PROVIDED BY THE MEMORANDUM(S) OF COVERAGE, FOR THE COVERAGE PERIOD SHOWN BELOW, NOTHWITHSTANDING ANY REQUIREMENT, TERM OR CONDITION OF ANY CONTRACT OR OTHER DOCUMENT WITH RESPECT TO WHICH THIS CERTIFICATE MAY BE ISSUED OR MAY PERTAIN. THE COVERAGE AFFORDED BY THE PROGRAM DESCRIBED HEREIN IS SUBJECT TO ALL THE TERMS, EXCLUSIONS, AND CONDITIONS OF SUCH MEMORANDUM(S) OF COVERAGE. THE FOLLOWING COVERAGE IS IN EFFECT:

PUBLIC ENTITY LIABILITY IS DEFINED IN THE MEMORANDUM(S) OF COVERAGE ON FILE WITH THE ENTITY, AND COPIES ARE AVAILABLE ON REQUEST.

Type Of Coverage: Public Entity Liability Including:	EffectiveDate	ExpirationDate	S.I.R.	Deductible	Liability Limit Per Occurrence
General Liability (Coverage)					
General Liability Products/Completed Operations Contractual Liability	31-Dec-2013	31-Dec-2014	-	$25,000	$2,000,000
Automobile Liability (Coverage)					
Owned Automobiles Non-Owned Automobiles Hired and Non-Owned Auto	31-Dec-2013	31-Dec-2014	-	$25,000	$2,000,000
Professional Liability Coverage					
Professional Liability (Coverage)	31-Dec-2013	31-Dec-2014	-	$25,000	$2,000,000

DESCRIPTION OF OPERATIONS/LOCATIONS/VEHICLES/EXCLUSIONS ADDED BY ENDORSEMENTS/SPECIAL PROVISIONS

THE HOLDER IS NAMED AS AN ADDITIONAL COVERED PARTY PER THE MEMORANDUM OF COVERAGE WITH RESPECTS TO MAINTENANCE SERVICES AGREEMENT BETWEEN THE TOWN OF LOS ALTOS HILLS AND WEST BAY SANITARY DISTRICT. COPIES OF THE MEMORANDUM OF COVERAGE ARE AVAILABLE UPON REQUEST.

CERTIFICATE HOLDER

Town of Los Altos Hills
Public Works Director
26379 Fremont Road
Los Altos Hills, CA 94022
Attn: Richard Chiu Jr.
17401 - 2414

CANCELLATION

SHOULD ANY OF THE ABOVE DESCRIBED MEMORANDUM(S) OF COVERAGE BE CANCELLED BEFORE THE EXPIRATION DATE THEREOF, NOTICE WILL BE DELIVERED IN ACCORDANCE WITH THE MEMORANDUM(S) OF COVERAGE PROVISIONS.

AUTHORIZED REPRESENTATIVE

Exhibit B

EXHIBIT B

CALIFORNIA SANITATION RISK MANAGEMENT AUTHORITY

ADDITIONAL COVERED PARTY ENDORSEMENT

This Endorsement forms a part of the Memorandum Of Coverage issued by the CALIFORNIA SANITATION RISK MANAGEMENT AUTHORITY.

ADDITIONAL COVERED PARTY: Town of Los Altos Hills

CSRMA MEMBER ENTITY: West Bay Sanitary District

DESCRIPTION OF ACTIVITY: Maintenance Services Agreement

DATE(S) OF ACTIVITY: 07/15/2014 - 12/31/2014

LOCATION OF ACTIVITY: Town of Los Altos Hills

MAXIMUM COVERAGE LIMIT: $2,000,000

DEDUCTIBLE: $25,000

The person or organization first named above is added as an ADDITIONAL COVERED PARTY pursuant to Section III(A), "Definitions" and Section VII, "Covered Parties." Coverage is provided through participation in a risk sharing joint powers authority, for general and automobile liability as defined in the Memorandum of Coverage.

The coverage being provided by this Endorsement is limited to "occurrences" arising out of the activity or location described, and the time period indicated herein, and is subject to all the terms, conditions and exclusions of the Memorandum of Coverage. Pursuant to Section III (A), the person or entity named above is only an Additional Covered Party with respect to operations performed by or on behalf of the CSRMA MEMBER ENTITY, or facilities owned or used by the CSRMA MEMBER ENTITY.

Coverage is in effect for the DATE(S) OF ACTIVITY indicated above and will not be cancelled or allowed to expire at a date other than the last date indicated except upon 30 days' written notice to the Additional Covered Party.

Date issued: 07/15/2014

Authorized Representative

EXHIBIT B

CERTIFICATE OF INSURANCE

15-Jul-2014

PRODUCER

Alliant Insurance Services, Inc.
100 Pine Street
11th Floor
San Francisco, CA 94111 (415) 403-1400

THIS CERTIFICATE IS ISSUED AS A MATTER OF INFORMATION ONLY AND CONFERS NO RIGHTS UPON THE CERTIFICATE HOLDER. THIS CERTIFICATE DOES NOT AFFIRMATIVELY OR NEGATIVELY AMEND, EXTEND OR ALTER THE COVERAGE AFFORDED BY THE POLICIES BELOW. THIS CERTIFICATE OF INSURANCE DOES NOT CONSTITUTE A CONTRACT BETWEEN THE ISSUING INSURER(S), AUTHORIZED REPRESENTATIVE OR PRODUCER, AND THE CERTIFICATE HOLDER.

INSURED West Bay Sanitary District
Member of CSRMA
500 Laurel Street
Menlo Park, CA 94025-

INSURERS AFFORDING COVERAGE

Please refer to Coverages section below.

97

COVERAGES

THE POLICIES OF INSURANCE LISTED BELOW HAVE BEEN ISSUED TO THE INSURED NAMED ABOVE FOR THE POLICY PERIOD INDICATED. NOTWITHSTANDING ANY REQUIREMENT, TERM OR CONDITION OF ANY CONTRACT OR OTHER DOCUMENT WITH RESPECT TO WHICH THIS CERTIFICATE MAY BE ISSUED OR MAY PERTAIN, THE INSURANCE AFFORDED BY THE POLICIES DESCRIBED HEREIN IS SUBJECT TO ALL THE TERMS, EXCLUSIONS AND CONDITIONS OF SUCH POLICIES. AGGREGATE LIMITS SHOWN MAY HAVE BEEN REDUCED BY PAID CLAIMS.

CoverageType	Insurer	Policy	EffectiveDate	ExpirationDate	LimitType	Amount
Workers Compensation and Employer Liability						
	Safety National Casualty Corporation	SP 4050951	01-Jul-2014	01-Jul-2015	Statutory	
					E.L. Each Accident	$1,000,000
					Disease - Each Employee	$1,000,000
					S.I.R.	$750,000

DESCRIPTION OF OPERATIONS/LOCATIONS/VEHICLES/EXCLUSIONS ADDED BY ENDORSEMENTS/SPECIAL PROVISIONS
THIS CERTIFICATE IS ISSUED FOR EVIDENCE ONLY.

IMPORTANT If the certificate holder is an ADDITIONAL INSURED, the policy(ies) must be endorsed. A statement on this certificate does not confer rights to the certificate holder in lieu of such endorsement(s). If SUBROGATION IS WAIVED, subject to the terms and conditions of the policy, certain policies may require an endorsement. A statement on this certificate does not confer rights to the certificate holder in lieu of such endorsement(s).

DISCLAIMER The Certificate of Insurance on this form does not constitute a contract between the issuing insurer(s), authorized representative or producer, and the certificate holder, nor does it affirmatively or negatively amend, extend or alter the coverage afforded by the policies listed thereon.

CERTIFICATE HOLDER

Town of Los Altos Hills 17401 - 2401
Public Works Director
26379 Fremont Road
Los Altos Hills, CA 94022
Attn: Richard Chiu Jr.

CANCELLATION

SHOULD ANY OF THE ABOVE DESCRIBED POLICIES BE CANCELLED BEFORE THE EXPIRATION DATE THEREOF, NOTICE WILL BE DELIVERED IN ACCORDANCE WITH THE POLICY PROVISIONS.

AUTHORIZED REPRESENTATIVE

EXHIBIT B

CERTIFICATE OF COVERAGE

15-Jul-2014

PRODUCER

Alliant Insurance Services, Inc.
100 Pine Street
11th Floor
San Francisco, CA 94111 (415) 403-1400

INSURED West Bay Sanitary District
Member of CSRMA
500 Laurel Street
Menlo Park, CA 94025-

97

THIS CERTIFICATE IS ISSUED AS A MATTER OF EVIDENCE ONLY AND CONFERS NO RIGHTS UPON THE CERTIFICATE HOLDER. THIS CERTIFICATE DOES NOT AFFIRMATIVELY OR NEGATIVELY AMEND, EXTEND OR ALTER THE COVERAGE AFFORDED BY THE MEMORANDUM(S) OF COVERAGE (MOC) BELOW.

THIS CERTIFICATE OF COVERAGE DOES NOT CONSTITUTE A CONTRACT BETWEEN THE ISSUING INSURER, AUTHORIZED REPRESENTATIVE OR PRODUCER, AND THE CERTIFICATE HOLDER.

MEMORANDUM OF COVERAGE NUMBER

CSWC WBSB 1415 1

PROGRAM AFFORDING COVERAGE

California Sanitation Risk Management Authority (C.S.R.M.A.)

COVERAGES

THIS IS TO CERTIFY THAT THE COVERAGE IS AFFORDED TO THE ABOVE NAMED MEMBER, AS PROVIDED BY THE MEMORANDUM(S) OF COVERAGE, FOR THE COVERAGE PERIOD SHOWN BELOW, NOTHWITHSTANDING ANY REQUIREMENT, TERM OR CONDITION OF ANY CONTRACT OR OTHER DOCUMENT WITH RESPECT TO WHICH THIS CERTIFICATE MAY BE ISSUED OR MAY PERTAIN. THE COVERAGE AFFORDED BY THE PROGRAM DESCRIBED HEREIN IS SUBJECT TO ALL THE TERMS, EXCLUSIONS, AND CONDITIONS OF SUCH MEMORANDUM(S) OF COVERAGE. THE FOLLOWING COVERAGE IS IN EFFECT:

PUBLIC ENTITY LIABILITY IS DEFINED IN THE MEMORANDUM(S) OF COVERAGE ON FILE WITH THE ENTITY, AND COPIES ARE AVAILABLE ON REQUEST.

Type Of Coverage: Public Entity Liability Including:	EffectiveDate	ExpirationDate	S.I.R.	Deductible	Liability Limit Per Occurrence
Worker's Compensation (Coverage)					
Limit	01-Jul-2014	01-Jul-2015	-	-	$750,000

DESCRIPTION OF OPERATIONS/LOCATIONS/VEHICLES/EXCLUSIONS ADDED BY ENDORSEMENTS/SPECIAL PROVISIONS

THIS CERTIFICATE IS ISSUED FOR EVIDENCE ONLY.

CERTIFICATE HOLDER

Town of Los Altos Hills
Public Works Director
26379 Fremont Road
Los Altos Hills, CA 94022
Attn: Richard Chiu Jr.

17401 - 2402

CANCELLATION

SHOULD ANY OF THE ABOVE DESCRIBED MEMORANDUM(S) OF COVERAGE BE CANCELLED BEFORE THE EXPIRATION DATE THEREOF, NOTICE WILL BE DELIVERED IN ACCORDANCE WITH THE MEMORANDUM(S) OF COVERAGE PROVISIONS.

AUTHORIZED REPRESENTATIVE

TOWN OF LOS ALTOS HILLS
Staff Report to the City Council

July 19, 2018

SUBJECT: RESOLUTION TO AUTHORIZE THE CITY MANAGER TO EXECUTE THE SECOND AMENDMENT TO THE MAINTENANCE SERVICES AGREEMENT BETWEEN THE TOWN OF LOS ALTOS HILLS AND WEST BAY SANITARY DISTRICT FOR OPERATION AND MAINTENANCE OF LOS ALTOS HILLS SANITARY SEWER SYSTEM

FROM: Nichol Bowersox, Utility Engineering Manager NAB

APPROVED: Carl Cahill, City Manager C.C.

RECOMMENDATION: That the City Council:

Adopt the attached resolution authorizing the City Manager to execute the second amendment of the **West Bay Sanitary District (WBSD) Maintenance Agreement** that includes operation and maintenance services for sanitary sewer systems, overflow emergency response services, asset management services, manhole data collection, and optional root foaming for an additional three years in an amount not to exceed $1.49 million.

BACKGROUND

The Town of Los Altos Hills (Town) is located in Santa Clara County, bordering the Cities of Los Altos and Palo Alto, as well as unincorporated areas of the County. Land uses within the Town are predominantly single family residential on large lots (typically at least one acre).

The Town currently provides wastewater collection to a little over half of its approximately 3,000 developed parcels, with the remainder served by on-site septic systems. The Town also provides wastewater collection to a portion of the Loyola unincorporated County area, with the rest on septic systems or served by the City of Los Altos. The collection system includes approximately 56 miles of sewer pipelines and two sewage pump stations owned by the Town (Purissima and O'Keefe), plus additional pump stations and sewer lines owned by private residents. Portions of the Town's collection system also receive flow from sewers owned by the cities of Palo Alto and Los Altos. Wastewater flows from the Town are discharged to the cities of Palo Alto and Los Altos, from where they are conveyed to the Palo Alto Regional Water Quality Control Plant.

The Town is also required to maintain regulatory compliance with the maintenance and operation of the collection system as part of its Sewer System Management Plan (SSMP). Last updated in May 2016, the SSMP addresses the overall management, operation, and maintenance of the sanitary sewer system and is required for all sewer system agencies

under the Statewide General Waste Discharge Requirements for Sanitary Sewer Systems, adopted in 2006 by the State Water Resources Control Board.

The Town is responsible for maintaining sewer mains in accordance with the Town Municipal Code. In accordance with section 6-4.443(7) of the municipal code, maintenance of the sewer lateral between the building and the main is the private property owner's responsibility; therefore, the agreement with WBSD pertains to maintenance and operation of the Town's sewer mainlines only and does not include private laterals.

In June 2014, the City Council authorized the City Manager to execute an agreement with WBSD to provide operation and maintenance services as well as emergency overflow response services. The Town and WBSD executed the first amendment to the Maintenance Service Agreement in June 2015 extending the original contract through July 2018.

WBSD, an independent Special District formed in 1902, provides wastewater collection and conveyance services to City of Menlo Park, Atherton, Portola Valley, and areas of East Palo Alto, Woodside, and unincorporated San Mateo and Santa Clara counties. WBSD's current service area is approximately 260 miles including Los Altos Hills.

DISCUSSION

WBSD has been under contract with the Town for almost 4 years and they have provided responsive service consistent with the terms of the current agreement. Almost all of the Town's sewer pipes have been cleaned and CCTV inspected. Sanitary sewer overflows have been reduced by more than 90% from 2014 to 2018. In addition, two (2) sewer pump stations have been maintained and the transition to a new Computerized Maintenance Management System (CMMS) has been completed.

The Town and WBSD are interested in extending the contract for another three years. Town staff has discussed scope changes with WBSD regarding footages for cleaning and CCTV inspections. Additional cleaning footage is needed for segments on the high frequency cleaning schedule and to maintain an overall 36-month cycle. Based on the completed CCTV inspections, the Town and WBSD agreed to a 6-year CCTV inspection schedule. The Town is continuing the option of chemical root foaming of approximately 17% of the Town's lines using WBSD's existing root foaming contract. The Town is re-evaluating the root foaming program and actual quantity for root foaming may be adjusted based on development the overall cleaning and maintenance plan. All data collected from cleaning, CCTV inspections, root foaming will be updated into the Town's CMMS system by WBSD to facilitate more efficient and better planning for future maintenance activities.

The proposed three-year extension with WBSD has been reviewed by staff and the Town's sewer consultant and the recommendation is to adopt the attached resolution authorizing the City Manager to execute an extension with **WBSD** to provide operation and maintenance services for sanitary sewer systems, 24/7 emergency and call-out services, asset management services, manhole data collection, and root foaming. This three-year contract agreement has a not-to-exceed amount of $1.49 million. The three-year extension will ensure maintenance consistency and budget predictability for the

Town and will allow WBSD to continue cleaning of the entire system. The proposed term of the amended agreement is from August 1, 2018 to July 31, 2021.

FISCAL IMPACT:

Sufficient funds are included in the Two-Year Proposed Sewer Operating Fund Operating and Maintenance Account (015-4800-6140) to cover FY 18/19 and FY 19/20 ($968,625) of this extension. Allocation for FY 20/21 will be adjusted based on the actual expenditures and maintenance progress.

ATTACHMENTS:

1. Resolution
2. Second Amendment to Maintenance Services Agreement Between Town of Los Altos Hills and West Bay Sanitary District for Operation and Maintenance of Los Altos Hills Sanitary Sewer System
3. Exhibit A
4. Maintenance Service Agreement Between Town of Los Altos Hills and West Bay Sanitary District for Operation and Maintenance of Los Altos Hills Sanitary Sewer System
5. Amendment to Maintenance Services Agreement Between Town of Los Altos Hills and West Bay Sanitary District for Operation and Maintenance of Los Altos Hills Sanitary Sewer System

RESOLUTION NO _____

A RESOLUTION OF THE CITY COUNCIL OF THE TOWN OF LOS ALTOS HILLS AUTHORIZING THE CITY MANAGER TO EXECUTE A SECOND AMENDMENT TO THE MAINTENANCE SERVICES AGREEMENT BETWEEN THE TOWN OF LOS ALTOS HILLS AND WEST BAY SANITARY DISTRICT FOR OPERATION AND MAINTENANCE OF LOS ALTOS HILLS SANITARY SEWER SYSTEM

WHEREAS, West Bay Sanitary District's contract with the Town will expire on July 31, 2018; and

WHEREAS, West Bay Sanitary District has fulfilled its obligations to the Town under the existing contract; and

WHEREAS, the Town and West Bay Sanitary District desires to extend the contract for another three years; and

WHEREAS, the Town and West Bay Sanitary District desires to modify the scope of work; and

WHEREAS, the Utility Engineering Manager has reviewed West Bay Sanitary District's proposal and recommends that the City Manager be authorized to execute an amendment to the existing agreement in an amount not to exceed $1.49 million; and

NOW, THEREFORE, BE IT RESOLVED by the City Council of the Town of Los Altos Hills that:

1. Public interest and convenience require the Town of Los Altos Hills to amend the Maintenance Services Agreement between the Town of Los Altos Hills and West Bay Sanitary District for Operation and Maintenance of Los Altos Hills Sanitary Sewer System.

2. The City Manager is hereby authorized on behalf of the Town to execute an amendment to the existing agreement with West Bay Sanitary District in an amount not to exceed $1.49 million.

PASSED AND ADOPTED this _____day of_____2018.

By: _____
Mayor

ATTEST:

_____
City Clerk

SECOND AMENDMENT TO MAINTENANCE SERVICES AGREEMENT BETWEEN THE TOWN OF LOS ALTOS HILLS AND WEST BAY SANITARY DISTRICT FOR OPERATION AND MAINTENANCE OF LOS ALTOS HILLS SANITARY SEWER SYSTEM

This amendment ("Amendment") by and between the Town of Los Altos Hills ("TOWN") and West Bay Sanitary District ("West Bay") is dated for references purposes as of August _____, 2018, with reference to the following facts:

RECITALS

WHEREAS, on August 1, 2014, TOWN and West Bay entered into an agreement entitled "Maintenance Services Agreement Between the Town of Los Altos Hills and West Bay Sanitary District for Opertaion and Maintenance of Los Altos Hills Sanitary Sewer System", ("Agreement"); and

WHEREAS, on August 1, 2015, TOWN and West Bay entered an amendment entitled "Amendment to Maintenance Services Agreement Between the Town of Los Altos Hills and West Bay Sanitary District for Opertaion and Maintenance of Los Altos Hills Sanitary Sewer System", ("First Amendment"); and

WHEREAS, both parties desire to amend the Agreement in order to modify the scope of work and to extend the term of the Agreement.

NOW THEREFORE, In consideration of the covenants, conditions and promises hereinafter contained, to be kept and performed by the parties hereto, TOWN and West Bay hereby agree that the following section of the aforesaid agreement dated August 1, 2014, as modified by the First Amendment, is amended to read as follows:

1. **Revision to Section 1 (with additions in *italics* and deletions in ~~strikethrough~~)**

1.1. Term of Services. The term of this Agreement shall begin on the Effective Date and shall end on ~~July 31, 2018~~ *July 31, 2021*, the date of completion specified in **Exhibit A**, and Contractor shall complete the work described in **Exhibit A** prior to that date, unless the term of the Agreement is otherwise terminated or extended, as provided for in Section 8. The time provided to Contractor to complete the services required by this Agreement shall not affect the Town's right to terminate the Agreement, as provided or in Section 8.

2. **Revision to the first paragraph of Section 2 (with additions in *italics* and deletions in ~~strikethrough~~)**

Section 2. COMPENSATION. Town hereby agrees to pay Contractor a sum not to exceed ~~$1,285,000 (one million two hundred and seventy-five thousand dollars)~~ *$1,489,556 (one million four hundred eight-nine thousand and five hundred and fifty-six dollars)*, notwithstanding any contrary indications that may be contained in Contractor's proposal, for services to be performed and

reimbursable costs incurred under this Agreement. In the event of a conflict between this Agreement and Contractor's proposal, attached as **Exhibit A**, regarding the amount of compensation, the Agreement shall prevail. Town shall pay Contractor for services rendered pursuant to this Agreement at the time and in the manner set forth herein. The payments specified below shall be the only payments from Town to Contractor for services rendered pursuant to this Agreement. Contractor shall submit all invoices to Town in the manner specified herein. Except as specifically authorized by Town, Contractor shall not bill Town for duplicate services performed by more than one person.

3. **Exhibit A**

Existing Exhibit A "Town of Los Altos Hills Proposal for Sewer Maintenance Activities by West Bay Sanitary District Years 1 through 3 (August 1 through July 31)" shall be replaced, in its entirety, with the attached Exhibit A.

4. **General Provisions**

A. This Amendment shall be binding upon and inure to the benefit of the parties hereto and their successors and assigns.

B. Except as modified hereby, the terms and provisions of the Agreement shall remain unmodified and in full force and effect.

C. Capitalized terms not otherwise defined herein shall have the same meaning as set forth in the Agreement.

D. In case of any conflict between any term or provision of this Amendment and any term of provision of the Agreement, the term or provision of this Amendment shall govern.

E. This Amendment shall be deemed to be made in, and construed in accordance with, the laws of the State of California. In the event suit is brought by either party hereunder, the Parties agree that venue for such action shall be vested in the state courts of California in the County of Santa Clara or in the United States District court in the Northern District of California.

F. This Amendment may be executed in one or more counterparts, each of which shall be deemed an original, but all of which when taken together shall constitute one agreement.

IN WITNESS WHEREOF, this Amendment has been executed as of the date set forth above.

WEST BAY SANITARY DISTRICT **TOWN OF LOS ALTOS HILLS**

APPROVED AS TO FORM
AND LEGALITY:

_____
District Counsel

AGREED:

_____
District Manager

APPROVED AS TO FORM
AND LEGALITY:

_____
City Attorney

AGREED:

_____
City Manager

2463185.1

EXHIBIT A

Task	Description of Work to be Completed on an Annual Basis	2018 Unit Cost	Unit	Quantity per Year	8/1/18 through 7/30/19	8/1/19 through 7/30/20	8/1/20 through 7/30/21	3-Year Total
1	**Pump Station Maintenance.** West Bay will continue to maintain the Town's two pump stations following the schedule outlined in the original RFP, and will also provide 24-hour emergency response. Pump station maintenance includes wet well cleaning twice annually and degreaser application as needed.	$1,879.50	month	12	$ 22,554	$ 23,231	$ 23,928	$ 69,712
2	**Preventative Maintenance Cleaning.** West Bay will clean up to 69,023 feet of mainline pipe every year for three years. This does not include the feet of mainline pipe cleaned in the High Frequency Schedule.	$ 1.33	lf	69,023	$ 91,801	$ 94,555	$ 97,391	$ 283,746
3	**High Frequency PM Cleaning.** West Bay will clean up to 89,000 feet of mainline pipe. This is in addition to the regular Preventative Maintenance Cleaning performed each year.	$ 1.33	lf	89,000	$ 118,370	$ 121,921	$ 125,579	$ 365,870
4	**CCTV Pipeline Inspection.** West Bay will complete CCTV inspection of approximately 49,345 each year on a 6 year cycle, using NASSCO PACP standards. Defects and other collection information will be included in the CMMS.	$ 1.75	lf	49,345	$ 86,354	$ 88,944	$ 91,613	$ 266,911
5	**Response to Category 2 and 3 Sanitary Sewer Overflows.** West Bay will follow the Town's SSMP and OERP in responding to and conducting initial reporting of SSOs. The Town will serve as the LRO. The Town's SSMP will closely follow the West Bay SSMP, which requires response within 60 minutes from notification. Following the SSO, and subsequent CCTV inspection, West Bay will make recommendations as to follow-up actions, including identifying issues related to lateral connections. We consider SSO Avoidance and Response as the most critical components of our operating strategy, and are well trained to address SSOs of all sizes, at any time, as described further in the original proposal. This item proposes a "per-SSO" approach. West Bay agrees to complete SSO response at no cost to the Town if the SSO in question resulted from inadequate cleaning by West Bay up to six months prior to the SSO.	$1,639	each	3	4,917	5,065	5,216	15,198

6	**Response to Category 1 SSOs.** West Bay will provide SSO response as described in Item 5. This will include appropriate creek mitigation when necessary for first 4 hours. ($650 for every hour thereafter.) If a technical report is required an additional $1,800 charge will apply.	$2,616	each	2	5,232	5,389	5,551	16,172
7	**SSO Response for Private Laterals**. West Bay will respond to SSOs related to private laterals, including determining ownership, notifying the owner of the issue, providing the owner with the Town's SSO response plan, and entering information into CMMS.	$349	each	5	1,745	1,797	1,851	5,394
8	**CCTV Inspection Quality Control -** West Bay will randomly select two line segments per month which have been cleaned in the prior month to verify the quality of the cleaning.	$537	each	24	$ 12,888	$ 13,275	$ 13,673	$ 39,836
9	**GIS and CMMS Updates**. West Bay will continue to update the Town's GIS and CMMS files in a efficient and useful manner as determined by West Bay. The Town will continue to have limited online access to the database. West Bay will integrate new line attribute data into the maps on a monthly basis, and will update the network configuration on a quarterly basis or as-needed. This work is anticipated to include approximately 10 hours per month and no more than 120 hours per year unless authorized by the Town.	$141.00	hour	120	$ 16,920	$ 17,428	$ 17,950	$ 52,298
10	**Monthly Management Report.** West Bay will continue to provide monthly O&M reports to the Town in the format that is currently in use.	$532	month	12	$ 6,384	$ 6,576	$ 6,773	$ 19,732

Subtotal Tasks 1 through 10					**$ 354,276**	**$ 364,905**	**$ 375,852**	**$ 1,095,033**
Optional 1	**Pump Station Unscheduled Repairs.** West Bay will perform unscheduled repairs to pump stations as needed. Time and Material will be charged for this service. Pump Supervisor $106 per hour/ $136 per hour at overtime rate. Pump Station Mechanic $81 per hour/ $104 per hour at overtime rate. (Estimated price based on one 4 hour call using Pump Supervisor and Pump Mechanic at regular labor rate only excluding material/parts.) Tasks lasting more than 4 hours in duration will require approval by Town representative.	$748.00	each					

Optional 2	**Unscheduled Cleaning.** Clean up to 7,200 feet of mainline pipe. This is in addition to the regular Preventative Maintenance and High Frequency Cleaning. Unscheduled Cleaning is line cleaning required for proper CCTV inspection or upon the Town's request. This charge will not apply to CCTV if the line segment has been cleaned within 6 months.	1.33	lf					
Optional 3	**High Frequency PM CCTV Assessment:** West Bay will CCTV inspect up to 22,250 feet of pipe in order to reassess their preventative maintenance frequency. Once the CCTV inspections are performed and reassessed, it is anticipated that we will be able to reduce the amount of lines designated to the High Frequency list. This CCTV includes a cleaning if necessary.	$ 2.42	lf					
Optional 4	**High Frequency PM CCTV Assessment OVERTIME (O.T.):** West Bay will CCTV inspect up to 22,250 feet of pipe in order to reassess their preventative maintenance frequency using Overtime. Once the CCTV inspections are performed and reassessed, it is anticipated that we will be able to reduce the amount of lines designated to the High Frequency list.This CCTV includes a cleaning if necessary.	$ 2.60	lf					
Optional 5	**Pass-through contract with Duke's for root foaming.** Assumes half of the pipes within 1/3 of service area require treatment annually.	$1.04	lf					
Optional 6	**Pipe Patch Repairs.** West Bay will perform upto 12 PipePatch repairs as requested by the Town.	$ 1,538.00	each					
Optional 7	**Additional Work Rates:** RCC $123 Hr / $158 O.T., PS Super $106 hr / 136 O.T., PS Mech. $81 hr. / $104 O.T., Field Supervisor $91 hr. / $117 O.T., Maintenance Tech $81 hr. / $104 O.T., Maintenance Worker $71 hr. / $91 O.T.							
Optional 8	**Audits:** West Bay will perform a 2 year Audit of the effectiveness of the SSMP and recommend revisions, if needed, in year 2020 = $1,800. West Bay will secure consultant for an independent 5-year Audit as required by GWDR 2006-003 in year 2019 at cost plus 10% (estimated at $15,000 for 5-year audit).							

WEST BAY SANITARY DISTRICT
AGENDA ITEM 6

To: ***Board of Directors***

From: ***Sergio Ramirez, Maintenance Superintendent Phil Scott, District Manager and***

Subject: ***Consider Adoption Of Resolution Approving Amendment No.5 To The Maintenance Services Agreement Between West Bay Sanitary District And The Town Of Woodside For Sanitary Sewer Maintenance Services for The Town of Woodside And Authorize The District Manager To Execute the Amended Agreement On Behalf Of The District***

Background

In June of 2013 the District Manager and Vivian Housen, of VWH Associates provided the Board with an update regarding the potential of consolidating sewer services with agencies in our area and the progress of an Interagency Utility Coordination Study.

At that time the Board directed the District Manager and Ms. Housen to proceed with discussions with several agencies which could possibly lead to Interagency Maintenance Agreements as well as discussions with agencies that could possibly lead to other resource sharing arrangements including consolidation.

Several discussions were held with the Town of Woodside just to the north/west of the District. The Town formally issued a Request for Proposals (RFP) in April, 2014 for which the District submitted a proposal for the Operation and Maintenance of the Town of Woodside Sanitary System on May 9, 2014.

Upon reviewing the proposals the Town believed the District could be competitive in pricing and provide superior maintenance services that would lead to the overall improvement of the performance of their collection system. On July 22nd, 2014 the Town Council approved to enter into an agreement with the District to provide sewer system services based on the submitted proposal.

In December 2014 the District began performing sewer pipeline maintenance and close circuit television inspection for the Town's System. In November of 2017 the District began to perform Pump Station Maintenance Services to the Town's two pump stations.

Analysis

The Town has approximately 4 miles of collection system pipe and does not have responsibility for the laterals at this time. The Town had a contract with a private contractor for collection system maintenance which expired in 2014, prior to the District taking over the collection system activities. The Town's contractor has remained under contract to provide Pump Station Maintenance and Monitoring until the Town notifies the District that it would like West Bay to take over the Pump Station portion as well.

The maintenance agreement includes tasks to clean sewer lines, TV inspect the collection system, and respond to SSO's, and Pump Station Maintenances Services including emergency response.

The amendment is to extend the agreement through the 2018-2019 Fiscal Year and to reflect a 3% increase in the cost of collection system maintenance service for the year.

Relevance to Strategic Plan

Section 4.0 Strategic Partners and Public Affairs: Our objective is to foster beneficial relationships to accomplish the goals of the District and to insure a well-informed public regarding District business and planning. We will do this by embracing strategic ties with other organizations, working closely with regulators, developing a deliberate legislative agenda and participating in professional associations.

This amendment to the agreement works to accomplish the Board of Directors Vision *"We cooperate with strategic partners to provide best quality wastewater services"* within the Strategic Plan 2014, referencing the objectives in Sections 4.2 *Interagency Maintenance Agreements* and 4.3 *Consolidation.*

Fiscal Impact

The agreement could generate a positive amount of approximately $70,050.00 in revenue for the year. The revenue would be sufficient to support the Town's required work at the District's fully loaded rate and recover the cost of the equipment and materials used including fuel.

Recommendation

The District Manager recommends the Board adopt the resolution approving Amendment #5 to the Maintenance Services Agreement Between West Bay Sanitary District and the Town of Woodside for Sanitary Sewer Maintenance Services for an additional year and Authorize the District Manager to Execute the Amended Agreement on Behalf of the District.

Attachment:

1. Resolution ___ (2018)
2. Amendment No. 5
3. Existing Agreement between WBSD and Town of Woodside

RESOLUTION NO. _____(2018)

RESOLUTION APPROVING AMENDMENT #5 TO THE MAINTENANCE SERVICES AGREEMENT BETWEEN WEST BAY SANITARY DISTRICT AND THE TOWN OF WOODSIDE FOR SANITARY SEWER MAINTENANCE SERVICES AND AUTHORIZE THE DISTRICT MANAGER TO EXECUTE THE AMENDED AGREEMENT ON BEHALF OF THE DISTRICT.

*****

WHEREAS, the West Bay Sanitary District Board has read and considered that certain Agreement ("Agreement") between the District and the Town of Woodside;

NOW, THEREFORE, the District Board of the West Bay Sanitary District, County of San Mateo, State of California, does hereby RESOLVE as follows:

Section 1. Public interest and convenience require the West Bay Sanitary District to enter the Agreement for Sanitary Sewer System Operations and Maintenance Services with a not-to-exceed amount of $70,050.00 to provide sanitary sewer maintenance services, emergency call-out, and asset management services.

Section 2. The West Bay Sanitary District hereby authorizes the District Manager to execute the Amended Agreement #5, for the fiscal year 2018-2019, on behalf of the District and subject to legal review, between the West Bay Sanitary District and Town of Woodside.

*****

PASSED AND ADOPTED by the District Board of the West Bay Sanitary District at a regular meeting thereof held on 8th day of August, 2018, by the following votes:

Ayes:

Noes:

Absent:

Abstain:

_____
President of the District Board of the
West Bay Sanitary District of San
Mateo County, State of California

Attest:

_____
Secretary of the District Board of the
West Bay Sanitary District of San Mateo
County, State of California

AMENDMENT #5 TO AGREEMENT FOR SANITARY SEWER MAINTENANCE SERVICES DATED July 22, 2014 BETWEEN THE TOWN OF WOODSIDE AND WEST BAY SANITARY DISTRICT

The above referenced agreement is hereby amended as follows:

The Town of Woodside (Town) seeks West Bay Sanitary District (District) to provide sanitary sewer operation and maintenance services. The purpose of this document is to amend the original Agreement with the District dated July 22, 2014 and to include both Sanitary Sewer and Pump Station Maintenance services for the Town through June 30, 2019.

This amendment is the Fifth Amendment to the Professional Services Agreement between the Town and the District for Sanitary Sewer Maintenance Services for the Town Center Sewer Assessment District (TCSAD) executed July 22, 2014. The specific services to be provided in the amendment to the contract are described in Exhibit "A". All work, including all labor, materials, and associated costs, shall be paid for at the rates established in Exhibit A.

The contract total amount is not to exceed SEVENTY THOUSAND AND FIFTY DOLLARS AND ZERO CENTS ($70,050.00).

This amendment is subject to the same provisions as the original agreement and is made a part of the agreement.

In witness whereof, the parties have executed this Agreement on the dates indicated below.

TOWN OF WOODSIDE	WEST BAY SANITARY DISTRICT
_____	_____
Kevin Bryant, Town Manager	Phil Scott, District Manager
Date: _____	Date: _____

Exhibit A
West Bay Sanitary District
Proposal for Sanitary Sewer Maintenance Services for TCSAD
Amended July 2018

2018-2019 Sanitary Sewer O&M Proposal - Town of Woodside, CA					
RFP Task	**Description**	**Quantity**	**Unit**	**Unit Price**	**Total**
1.1	Sewer cleaning of 21,723 feet plus 1,432 of Hot Spots per year of sewer line - entire system.	23,155	Each	*$1.00*	$23,155.00
	1,432 feet of Hot Spot Cleaning (aka High Frequency) are done three additional times after initial Annual Cleaning. Performed Quarterly.	4,296	Quarters	*$1.10*	$4,725.60
2.1	CCTV inspection (and cleaning as-needed) related to SSOs or repairs. Assumes 5 incidents/year.	1,500	Linear Foot	*$1.78*	$2,670.00
	Annual CCTV inspection (cleaning as needed)	5,000	Linear Foot	*$1.78*	$8,900.00
3.1	West Bay will maintain the Town's Two (2) pump stations. This includes inspecting and routine maintenance of the Town Center and the La Questa pump stations.	51	Weekly	*$455.00*	$23,205.00
3.2	West Bay will pull the pumps and perform a thorough maintenance of the oils, impellers, volutes and wear rings. The annual inspection will include amp and current draws.	1	Annual	*$1,105.00*	$1,105.00
3.3	West Bay shall provided response to pump station alarms. The ISAC Telemetry System at the Town Center and the La Questa pump stations shall be programmed to call the West Bay Pump Facility Supervisor with the Operation Superintendent as back up, for pump station failures.	3	Per Incident	*$390.00*	$1,170.00
4.1	SSO Response including clearing stoppage, clean up, reports, etc. (collection system and pump stations)	3	Per Incident	*$1,071.48*	$3,214.44
4.2	Service Call Unplanned Responses - 3 hour minimum (additional hrs @ $122 per/hr)	3	Per Incident	*$367.15*	$1,101.45
5	West Bay will provide a quarterly summary format that includes performance indicators that will be tracked and measured on a quarterly and annual basis.	4	Quarterly	*$200.85*	$803.40
Sanitary Sewer O&M Maintenance Baseline Cost, Tasks 1 through 5					**$70,049.89**
Option 1	FOG Inspections and Ducumentation	5	Each	$ 393.38	$1,966.90
Option 2	FOG Outreach, up to 20 mailers	1	Each	$ 131.13	$131.13
Option 3	Manhole Root Foam	10	Each	$ 110.00	$1,100.00

AGREEMENT FOR SANITARY SEWER MAINTENANCE SERVICES

This Agreement is made and entered into as of the 22nd day of July 2014, by and between the Town of Woodside hereinafter called "TOWN" and West Bay Sanitary District, hereinafter called "CONTRACTOR".

RECITALS

This Agreement is entered into with reference to the following facts and circumstances:

A. That TOWN desires to engage CONTRACTOR to render certain services to provide sanitary sewer maintenance services for the Town Center Sewer Assessment District, including but not limited to maintaining pipelines and pump stations and responding to sanitary sewer overflows; and

B. That CONTRACTOR is qualified to provide such services to the TOWN; and

C. That the TOWN has elected to engage the services of CONTRACTOR upon the terms and conditions as hereinafter set forth.

1. Services. The services to be performed by CONTRACTOR under this Agreement shall include those services set forth in Exhibit A, which is, by this reference, incorporated herein and made a part hereof as though it were fully set forth herein.

   Performance of the work specified in said Exhibit is hereby made an obligation of CONTRACTOR under this Agreement, subject to any changes that may be made subsequently hereto upon the mutual written agreement of the said parties.

   Where in conflict, the terms of this Agreement supersede and prevail over any terms set forth in Exhibit A.

2. Term; Termination. (a) The term of this Agreement shall commence on December 1, 2014, shall be extended by Town on an annual fiscal year basis (July 1 – June 30) when agreeable to both parties and shall expire upon notification in accordance with (b) below.

   (b) Notwithstanding the provisions of (a) above, either party may terminate this Agreement without cause by giving written notice not less than ten (10) days prior to the effective date of termination, which date shall be included in said notice. In the event of such termination, TOWN shall compensate CONTRACTOR for services rendered, and reimburse CONTRACTOR for costs and expenses incurred, to the date of termination, calculated in accordance with the provisions of paragraph 3.

In ascertaining the services actually rendered to the date of termination, consideration shall be given both to completed work and work in process of completion. Nothing herein contained shall be deemed a limitation upon the right of TOWN to terminate this Agreement for cause, or otherwise to exercise such rights or pursue such remedies as may accrue to TOWN hereunder.

3. Compensation; Expenses; Payment. TOWN shall compensate CONTRACTOR for all services performed by CONTRACTOR hereunder in accordance with the provisions of Exhibit B hereof, attached hereto and by this reference incorporated herein.

   Compensation hereunder shall be payable upon monthly billing therefore by CONTRACTOR to TOWN, which billing shall include an itemized statement, briefly describing by task and labor category or cost/expense items billed.

4. Additional Services. In the event TOWN desires the performance of additional services not otherwise included within the services described in Exhibits A or B including the optional services indicated, such services shall be authorized in advance of the performance thereof by the Town Manager or Town Council in writing. Such amendment to this Agreement shall include a description of the services to be performed thereunder, the maximum compensation and reimbursement of costs and expenses payable therefore, the time of performance thereof, and such other matters as the parties deem appropriate for the accomplishment of such services. Except to the extent modified by written amendment, all other terms and conditions of this Agreement shall be deemed incorporated in each such amendment.

5. Records. CONTRACTOR shall keep and maintain accurate records of all time expended and costs and expenses incurred relating to services to be performed by CONTRACTOR hereunder. Said records shall be available to TOWN for review and copying during regular business hours at CONTRACTOR's place of business or as otherwise agreed upon by the parties.

6. Authorization. This Agreement becomes effective when endorsed by both parties in the space provided below.

7. Reliance on Professional Skill of CONTRACTOR. CONTRACTOR represents that it has the necessary professional skills to perform the services required and the TOWN shall rely on such skills of the CONTRACTOR to do and perform the work. In performing services hereunder CONTRACTOR shall adhere to the standards generally

prevailing for the performance of professional services similar to those to be performed by CONTRACTOR hereunder.

8. Documents. All documents, plans, drawings, renderings, and other papers, or copies thereof, as finally rendered, prepared by CONTRACTOR pursuant to the terms of this Agreement, shall, upon preparation and delivery to TOWN, become the property of TOWN.

9. Relationship of Parties. It is understood that the relationship of CONTRACTOR to the TOWN is that of an independent contractor and all persons working for or under the direction of CONTRACTOR are its agents or employees and not agents or employees of the TOWN.

10. Schedule. This agreement is for maintenance services on an annual basis. For budgeting purposes, the TOWN and CONTRACTOR agree to various types of services with annual cleaning requirements and minimal service call-out hours. CONTRACTOR shall adhere to the schedule to complete the work as set forth in Exhibits A and B; provided, that TOWN shall grant reasonable extensions of time for the performance of such services occasioned by governmental reviews of CONTRACTOR's work product or other unavoidable delays; provided, further, that such unavoidable delay shall not include strikes, lockouts, work stoppages, or other labor disturbances conducted by, or on behalf of, CONTRACTOR's officers or employees.

CONTRACTOR acknowledges the importance to TOWN of TOWN's maintenance scheduling requirements and agrees to put forth its best professional efforts to perform its services under this Agreement in a manner consistent with that schedule.

11. Indemnity. To the fullest extent permitted by law (including, without limitation, California Civil Code Sections 2782 and 2782.6), CONTRACTOR shall defend (with legal counsel reasonably acceptable to the TOWN), indemnify and hold harmless TOWN and its officers, agents, departments, officials, representatives and employees (collectively "Indemnitees") from and against any and all claims, loss, cost, damage, injury (including, without limitation, injury to or death of an employee of CONTRACTOR or its subconsultants), expense and liability of every kind, nature and description (including, without limitation, incidental and consequential damages, court costs, attorneys' fees, litigation expenses and fees of expert consultants or expert witnesses incurred in connection therewith and costs of investigation) to the extent that they arise out of or pertain to the negligence, recklessness or willful misconduct of CONTRACTOR, any subconsultant, anyone directly or indirectly employed by them, or anyone that they control (collectively "Liabilities"). Such obligations to defend, hold harmless and indemnify any Indemnitee shall

not apply, however, to the extent that such Liabilities are caused solely by the negligence, recklessness, or willful misconduct of such Indemnitees. Additionally, CONTRACTOR shall not be required to indemnify, hold harmless or defend the TOWN for any Liabilities under the Clean Water Act or state law, including but not limited to fines, civil penalties, or legal and expert witness fees or costs that may arise from sewer system failures, overflows, or other damages or costs, provided that the failure, overflow, or other cause of the damage was not solely caused by the CONTRACTOR's negligence, recklessness or willful misconduct in the performance of work specified by this Agreement.

12. Insurance. CONTRACTOR shall acquire and maintain Workers' Compensation, employer's liability, commercial general liability, and owned and non-owned and hired automobile liability insurance coverage relating to CONTRACTOR's services to be performed hereunder covering TOWN's risks in form subject to the approval of the TOWN Attorney and/or TOWN's Risk Manager. The minimum amounts of coverage corresponding to the aforesaid categories of insurance per insurable event, shall be as follows:

Insurance Category	Minimum Limits
Workers' Compensation	statutory minimum
Employer's Liability	$1,000,000 per accident for bodily injury or disease
Commercial General Liability	$1,000,000 per occurrence and $2,000,000 aggregate for bodily injury, personal injury and property damage
Automobile Liability	$1,000,000 per accident for bodily injury and property damage (coverage required to the extent applicable to CONSULTANT's vehicle usage in performing services hereunder)

Concurrently with the execution of this Agreement, CONTRACTOR shall, on the Insurance Coverage form provided in Exhibit C, furnish TOWN with certificates and copies of information or declaration pages of the insurance required hereunder and, with respect to evidence of commercial general liability and automobile liability insurance coverage, original endorsements:

(a) Precluding cancellation or reduction in per occurrence limits before the expiration of thirty (30) days (10 days for nonpayment) after TOWN shall have received written notification of cancellation in coverage or reduction in per occurrence limits by first class mail;

(b) Providing that CONTRACTOR's insurance shall apply separately to each insured against whom claim is made or suit is brought, except with respect to the limits of the insurer's liability (cross liability endorsement);

(c) Naming the TOWN of Woodside, its Council and Board respectively, officers, boards, commissions, employees, and agents, as additional insureds; and

(d) Providing that CONTRACTOR's insurance coverage shall be primary insurance with respect to TOWN, its Council, officers, boards, commissions, employees, and agents, and any insurance or self-insurance maintained by TOWN for itself, its Council, officers, boards, commissions, employees, or agents shall be in excess of CONTRACTOR's insurance and not contributory with it.

13. WORKERS' COMPENSATION.CONTRACTOR certifies that it is aware of the provisions of the Labor Code of the State of California which require every employer to be insured against liability for workers' compensation or to undertake self-insurance in accordance with the provisions of that Code, and CONTRACTOR certifies that he will comply with such provisions before commencing the performance of the work of this agreement.

14. NON-DISCRIMINATION. The CONTRACTOR will not discriminate against any employee or applicant for employment because of race, color, religion, sex or national origin. The CONTRACTOR will take affirmative action to insure that applicants are employed and the employees are treated during employment without regard to their race, color, religion, sex or national origin. Such action shall include, but not be limited to the following: employment, advancement, demotion, transfer, recruitment, or recruitment advertising, layoff or termination, rates of pay or other forms of compensation, and selection for training, including apprenticeship. The CONTRACTOR shall at all times be in compliance with the requirements of the Federal Americans With Disabilities Act (Public Law 101-336) which prohibits discrimination on the basis of disability by public entities. The CONTRACTOR agrees to post in conspicuous places available to employees and applicants for employment any notices provided by the TOWN setting forth the provisions of this non-discrimination clause.

15. Notice. All notices required by this Agreement shall be given to the TOWN and CONTRACTOR in writing, by first class mail, postage prepaid, addressed as follows:

TOWN:	TOWN of Woodside 2955 Woodside Road Woodside, CA94062 Attention: Paul T. Nagengast Deputy Town Manager
CONTRACTOR:	Phil Scott, District Manager West Bay Sanitary District 500 Laurel Street Menlo Park, CA 94025-3486

16. Non-Assignment. This Agreement is not assignable either in whole or in part.

17. Amendments. This Agreement may be amended or modified only by written agreement signed by both parties.

18. Validity. The invalidity in whole or in part of any provision of this Agreement shall not void or affect the validity of any other provision of this Agreement.

19. Governing Law. This Agreement shall be governed by the laws of the State of California and any suit or action initiated by either party shall be brought in the County of San Mateo, California. In the event of litigation between the parties hereto to enforce any provision of the Agreement, the unsuccessful party will pay the reasonable attorney's fees and expenses of litigation of the successful party.

20. Mediation. Should any dispute arise out of this Agreement, the parties shall meet in mediation and attempt to reach a resolution with the assistance of a mutually acceptable mediator. Neither party shall be permitted to file legal action without first meeting in mediation and making a good faith attempt to reach a mediated resolution. The costs of the mediator, if any, shall be paid equally by the parties. If a mediated settlement is reached neither party shall be deemed the prevailing party for purposes of the settlement, and each party shall bear its own legal costs.

21. Conflict of Interest. CONTRACTOR may serve other clients, but none who are active within the TOWN of Woodside or who conduct business

that would place CONTRACTOR in a "conflict of interest" as that term is defined in State law.

22. Entire Agreement. This Agreement, including Exhibits A, B and C comprise the entire Agreement.

IN WITNESS WHEREOF, the parties hereto have caused this Agreement to be executed on the date first above written by their respective officers duly authorized in that behalf.

TOWN OF WOODSIDE:

Dated: 11/12/14

Kevin Bryant, Town Manager

ATTEST:

Dated: 11/14/14

Janet G. Koelsch, Town Clerk

APPROVED AS TO FORM:

Dated: 11/14/14

Jean Savaree, Town Attorney

CONTRACTOR:

Dated: 10-28-14

Phil Scott, District Manager
West Bay Sanitary District

Anthony P. Condotti, District Counsel

EXHIBITS A-B

SCOPE OF WORK
AND FEE

WEST BAY
SANITARY DISTRICT

Serving Our Community Since 1902

500 Laurel Street, Menlo Park, California 94025-3486 (650) 321-0384 (650)321-4265 FAX

PHIL SCOTT
District Manager

In reply, please refer to our
File No.

July 8, 2014

Paul T. Nagengast, P.E.
Deputy Town Manager
2955 Woodside Road
Woodside, CA 94062

Subject: Amended Proposal for Sanitary Sewer Maintenance Services for the Town Center Sewer Assessment District (TCSAD)

Dear Mr. Nagengast:

Thank you for meeting with us last week to discuss our proposal for sanitary sewer maintenance services. As requested, this letter amends the original proposal as summarized below. An updated scope of services and detailed cost breakdown are attached for your review and use.

Changes to Proposed Scope of Work:

- Maintenance of both pump stations will be completed by CSMS until the Town Center Pump Station upgrade project is completed. West Bay Sanitary District (West Bay) will provide consultation during project design. It is anticipated that the upgrade project will continue beyond the initial term of this agreement.
- The SSO Response item has been separated into three tasks: Collection System SSOs, Pump Station SSOs, and Maintenance Call-Outs. Each task includes an hourly, on-call rate. Pump Station Alarm response is presented as Option 1.
- Optional scope and budget have been added to update and implement the Town's Fats, Oils, and Grease (FOG) control program.
- Development of electronic maps is not included in the scope. However, West Bay will record relevant information in the Computerized Maintenance Management System database as it is gathered, in support of any future mapping effort by the Town.
- West Bay will assist the Town in updating the Sewer System Management Plan, and completing the 2012-13 Biennial SSMP Audit.

We are excited about this opportunity to provide sewer maintenance services to the Town. Please call me at (650) 321-0384 or *sramirez@westbaysanitary.org* if you have questions or would like additional information.

Sincerely,
West Bay Sanitary District

Sergio Ramirez
Project Manager

cc: PLS, BHK, FILE

Revised Task List and Proposed Cost

Task	Description	Proposed Cost
Task 1. Review Existing Data, Documents and Policies	West Bay will review the existing information listed in the RFP, and will also meet with CSMS, as available, to obtain historical information about the system.	Included Below
Task 2. Integrate Town Facilities into Maintenance Strategy. Based on the information gathered in Task 1, West Bay will integrate cleaning and CCTV inspection activities into its current system-wide maintenance strategy.	West Bay will integrate the Town's sewer collection system into its current maintenance strategy, as described in Section IV of the original proposal. Subtasks include: Task 2.1 Sewer cleaning of pipe on an annual basis, including **16,277 lf** of mainline pipe and **2,640 lf per quarter** of additional hot spots, developing a progressive cleaning strategy (to move pipes on and off of the hot spot list) using CMMS, and conducting QA/QC of cleaning activities through CCTV inspection. Task 2.2 CCTV Inspection of **1,000 lineal feet** of previously uninspected pipelines to be identified by the Town, plus **4,000 lineal feet** of pipe annually. This budget includes **five additional CCTV inspections** post-SSO or post-repair, following West Bay standard operating procedures. All inspections will follow NASSCO PACP standards. Task 2.3. Pump station maintenance will be completed by others during the initial term of this agreement. Pump station SSO response and assistance during design and construction of pump station upgrades are described below as an optional service.	$22,975 $11,315 $0
Task 3 Sanitary Sewer Overflow Response and Reporting Support for Collection System or Pump Stations	Task 3.1. West Bay will follow the Town's Sewer System Management Plan and Overflow Emergency Response Plan in responding to and conducting initial reporting of up to **three sanitary sewer overflows**. The Town will serve as the Legally Responsible Official (LRO). Response will be initiated within 60 minutes from notification. Following the SSO and subsequent CCTV inspection, West Bay will recommend follow-up actions. Task 3.2. This task also includes budget for **three maintenance call-outs** separate from SSO response.	$2,942 Or $326.85 per hour; 3 hour minimum during non-work hours. $1,008 $105 per hour after first 3 hours
Task 4. Progress Reports	At the beginning of the project, we will develop a standard monthly summary format that includes the performance indicators that will be tracked and measured on a monthly and annual basis. These indicators will correlate closely to the measures that are described in Element 9 of the Town's SSMP. If these elements are not yet defined, we will assist the Town in developing a list that follows Regional Board expectations. The summaries will document issues and provided recommendations to address these issues.	Included Above
	Total Baseline Cost (Task 1 - 4)	**$38,239**
Optional Task 1. Additional Pump Station Response	Response shall be provided to **three pump station alarms**. The auto dialer at the Town's main pump station could be programmed to call the West Bay pump facility supervisor with the West Bay maintenance superintendent as back up, in case of a pump station problem or failure, if the Town requests that West Bay serve as the First Responder.	$1,008 $120 per hour after first 3 hours
Optional Task 2. Pump Station consultation during design activities	West Bay will provide up to **ten hours of consultation** on the Town Center Pump Station Improvements Project, including attending meetings and conducting design reviews from an O&M perspective.	$950
Optional Task 3. Fats, Oils, and Grease Control Program Assistance	This task includes inspection of **up to five Food Service Establishments** and other FOG-producing businesses, documentation, and recommendations for enforcement. West Bay will also implement FOG outreach, which includes the distribution of **up to 20 FOG-prevention mailers**.	$1,920
Optional Task 4. Sewer System Management Plan Update	West Bay will engage V. W. Housen & Associates (VWHA) to update the Town's Sewer System Management Plan. The cost for this work will be finalized through discussions with Town staff, and varies depending on the level of detail that is desired in the SSMP document. This task includes completion of the mandatory 2014 SSMP Audit.	$7,000 to $10,000
Optional Task 5. Point Repairs (including Trenchless Spot Repairs)	West Bay has the expertise and equipment, and is available to assist the Town with point and spot repairs. We will advise the Town as to whether each repair can be addressed through a "Pipe Patch" approach, or will require a dig-up. Our experience with both methods of repair is described further in Section IV of the original proposal.	Per Repair. See Appendix A from Original Proposal.

2014-2015 Sanitary Sewer O&M Proposal - Town of Woodside, CA					
RFP Task	Description	Quantity	Unit	Unit Price	Total
2.1	Sewer cleaning and flushing of 16,277 feet per year of sewer line - entire system	1	Each	*$14,974.84*	$14,974.84
	Hot Spot Cleaning (aka High Frequency) - 2,640 ft quarterly; 1st quarter cleaning included in Item #1	3	Quarters	*$2,666.40*	$7,999.20
2.2	CCTV inspection and cleaning related to lines previously determined as "inaccessible"	1,000	Linear Foot	*$2.35*	$2,350.00
	CCTV inspection (and cleaning as-needed) related to SSOs or repairs. Assumes 5 incidents/year.	1,500	Linear Foot	*$1.63*	$2,445.00
	Annual CCTV inspection (cleaning as needed)	4,000	Linear Foot	*$1.63*	$6,520.00
2.3	Operation and Maintenance of 2 pump stations ~ 2 visits per week each station	Completed by Others (CSMS)			
3.1	SSO Response including clearing stoppage, clean up, reports, etc. (collection system and pump stations)	3	Per Incident	*$980.55*	$2,941.65
	Alternative Hourly Rate (3-person crew plus equipment, 3 hour minimum)	1	Hour	*$326.85*	
3.2	Service Call Unplanned Responses - 3 hour mininum (additional hours @ $105 per/hr)	3	Per Incident	*$336.00*	$1,008.00
			Baseline Cost, RFP Tasks 1 through 4		**$38,238.69**
Option 1	Pump Station Alarm Response - 3 hour mininum (additional hours @ $120 per/Hr	3	Per Incident	*$336.00*	$1,008.00
Option 2	Pump Station Consultation. WBSD staff involvement during design activities.	10	Hours	*$95.00*	$950.00
Option 3	FOG Control Support Services:				
3a	FOG Inspections and Documentation	5	Each	*$360.00*	$1,800.00
3b	Neighborhood Outreach, up to 20 mailers	1	Each	*$120.00*	$120.00
Option 4	Initial Update of SSMP plus SSMP Audit	.1	Each	$7,000 to $10,000 Depending on Level of Detail	

Exhibit B 1 & 2

Example Unit Costs for Point and Spot Repairs

Unit Rates	
Labor:	
Maintenance Worker:	$102/hr
Rehab Tech:	$91/hr
Maintenance Worker:	$59/hr
Equipment:	
Backhoe	$25/hr
Roller	$10/hr
Utility Truck	$22/hr
Material: Cost plus Markup	

Open Trench Repair Estimate (Typical 5 foot Repair 6 feet deep)	
Labor:	$3,000
Material:	$600
Equipment:	$400
Total:	**$4,000**

PipePatch CIPP Repair Estimate		
Labor:		$700
Material:		
6x24 Patch Kit	$	400.00
6x48 Patch Kit	$	600.00
8x24 Patch Kit	$	500.00
8x48 Patch Kit	$	800.00
Equipment:		$200
Total:		
6x24 Patch	**$**	**1,300.00**
6x48 Patch	**$**	**1,500.00**
8x24 Patch	**$**	**1,400.00**
8x48 Patch	**$**	**1,700.00**

** Example Unit Costs for Optional Open Trench and CIPP Spot Repairs
(Actual Costs May Vary, Depending on Site Conditions)

WEST BAY SANITARY DISTRICT

Exhibit B 6-17 of 2

EXHIBIT C
INSURANCE FORMS

CERTIFICATE OF COVERAGE

30-Oct-2014

PRODUCER

Alliant Insurance Services, Inc.
100 Pine Street
11th Floor
San Francisco, CA 94111 (415) 403-1400

THIS CERTIFICATE IS ISSUED AS A MATTER OF EVIDENCE ONLY AND CONFERS NO RIGHTS UPON THE CERTIFICATE HOLDER. THIS CERTIFICATE DOES NOT AFFIRMATIVELY OR NEGATIVELY AMEND, EXTEND OR ALTER THE COVERAGE AFFORDED BY THE MEMORANDUM(S) OF COVERAGE (MOC) BELOW.

THIS CERTIFICATE OF COVERAGE DOES NOT CONSTITUTE A CONTRACT BETWEEN THE ISSUING INSURER, AUTHORIZED REPRESENTATIVE OR PRODUCER, AND THE CERTIFICATE HOLDER.

INSURED West Bay Sanitary District
Member of CSRMA
500 Laurel Street
Menlo Park, CA 94025-

97

MEMORANDUM OF COVERAGE NUMBER

CSL WBSD 1314 1

PROGRAM AFFORDING COVERAGE

California Sanitation Risk Management Authority (C.S.R.M.A.)

COVERAGES

THIS IS TO CERTIFY THAT THE COVERAGE IS AFFORDED TO THE ABOVE NAMED MEMBER, AS PROVIDED BY THE MEMORANDUM(S) OF COVERAGE, FOR THE COVERAGE PERIOD SHOWN BELOW, NOTHWITHSTANDING ANY REQUIREMENT, TERM OR CONDITION OF ANY CONTRACT OR OTHER DOCUMENT WITH RESPECT TO WHICH THIS CERTIFICATE MAY BE ISSUED OR MAY PERTAIN. THE COVERAGE AFFORDED BY THE PROGRAM DESCRIBED HEREIN IS SUBJECT TO ALL THE TERMS, EXCLUSIONS, AND CONDITIONS OF SUCH MEMORANDUM(S) OF COVERAGE. THE FOLLOWING COVERAGE IS IN EFFECT:

PUBLIC ENTITY LIABILITY IS DEFINED IN THE MEMORANDUM(S) OF COVERAGE ON FILE WITH THE ENTITY, AND COPIES ARE AVAILABLE ON REQUEST.

Type Of Coverage: Public Entity Liability Including:	EffectiveDate	ExpirationDate	S.I.R.	Deductible	Liability Limit Per Occurrence
General Liability (Coverage)					
General Liability Products/Completed Operations Contractual Liability	31-Dec-2013	31-Dec-2014	-	$25,000	$2,000,000
Automobile Liability (Coverage)					
Owned Automobiles Non-Owned Automobiles Hired and Non-Owned Auto	31-Dec-2013	31-Dec-2014	-	$25,000	$2,000,000

DESCRIPTION OF OPERATIONS/LOCATIONS/VEHICLES/EXCLUSIONS ADDED BY ENDORSEMENTS/SPECIAL PROVISIONS

THE HOLDER IS NAMED AS AN ADDITIONAL COVERED PARTY PER THE MEMORANDUM OF COVERAGE WITH RESPECTS TO THE SANITARY SEWER MAINTENANCE SERVICES FOR THE TOWN CENTER SEWER ASSESSMENT DISTRICT (TCSAD). COPIES OF THE MEMORANDUM OF COVERAGE ARE AVAILABLE UPON REQUEST.

CERTIFICATE HOLDER

Town of Woodside 17376 - 240

2955 Woodside Road
Woodside, CA 94062
Attn: Paul T. Nagengast (Deputy Town Manager)

CANCELLATION

SHOULD ANY OF THE ABOVE DESCRIBED MEMORANDUM(S) OF COVERAGE BE CANCELLED BEFORE THE EXPIRATION DATE THEREOF, NOTICE WILL BE DELIVERED IN ACCORDANCE WITH THE MEMORANDUM(S) OF COVERAGE PROVISIONS.

AUTHORIZED REPRESENTATIVE

CALIFORNIA SANITATION RISK MANAGEMENT AUTHORITY

ADDITIONAL COVERED PARTY ENDORSEMENT

This Endorsement forms a part of the Memorandum Of Coverage issued by the CALIFORNIA SANITATION RISK MANAGEMENT AUTHORITY.

ADDITIONAL COVERED PARTY: Town of Woodside

CSRMA MEMBER ENTITY: West Bay Sanitary District

DESCRIPTION OF ACTIVITY: Sanitary Sewer Maintenance Services for the Town Center Sewer Assessment District (TCSAD).

DATE(S) OF ACTIVITY: 10/30/2014 - 12/31/2014

LOCATION OF ACTIVITY: Town of Woodside

MAXIMUM COVERAGE LIMIT: $2,000,000

DEDUCTIBLE: $25,000

The person or organization first named above is added as an ADDITIONAL COVERED PARTY pursuant to Section III(A), "Definitions" and Section VII, "Covered Parties." Coverage is provided through participation in a risk sharing joint powers authority, for general and automobile liability as defined in the Memorandum of Coverage.

The coverage being provided by this Endorsement is limited to "occurrences" arising out of the activity or location described, and the time period indicated herein, and is subject to all the terms, conditions and exclusions of the Memorandum of Coverage. Pursuant to Section III (A), the person or entity named above is only an Additional Covered Party with respect to operations performed by or on behalf of the CSRMA MEMBER ENTITY, or facilities owned or used by the CSRMA MEMBER ENTITY.

Coverage is in effect for the DATE(S) OF ACTIVITY indicated above and will not be cancelled or allowed to expire at a date other than the last date indicated except upon 30 days' written notice to the Additional Covered Party.

Date issued: 10/30/2014

Authorized Representative

CERTIFICATE OF INSURANCE

30-Oct-2014

PRODUCER

Alliant Insurance Services, Inc.
100 Pine Street
11th Floor
San Francisco, CA 94111 (415) 403-1400

THIS CERTIFICATE IS ISSUED AS A MATTER OF INFORMATION ONLY AND CONFERS NO RIGHTS UPON THE CERTIFICATE HOLDER. THIS CERTIFICATE DOES NOT AFFIRMATIVELY OR NEGATIVELY AMEND, EXTEND OR ALTER THE COVERAGE AFFORDED BY THE POLICIES BELOW. THIS CERTIFICATE OF INSURANCE DOES NOT CONSTITUTE A CONTRACT BETWEEN THE ISSUING INSURER(S), AUTHORIZED REPRESENTATIVE OR PRODUCER, AND THE CERTIFICATE HOLDER.

INSURED West Bay Sanitary District
Member of CSRMA
500 Laurel Street
Menlo Park, CA 94025-

97

INSURERS AFFORDING COVERAGE

Please refer to Coverages section below.

COVERAGES

THE POLICIES OF INSURANCE LISTED BELOW HAVE BEEN ISSUED TO THE INSURED NAMED ABOVE FOR THE POLICY PERIOD INDICATED. NOTWITHSTANDING ANY REQUIREMENT, TERM OR CONDITION OF ANY CONTRACT OR OTHER DOCUMENT WITH RESPECT TO WHICH THIS CERTIFICATE MAY BE ISSUED OR MAY PERTAIN, THE INSURANCE AFFORDED BY THE POLICIES DESCRIBED HEREIN IS SUBJECT TO ALL THE TERMS, EXCLUSIONS AND CONDITIONS OF SUCH POLICIES. AGGREGATE LIMITS SHOWN MAY HAVE BEEN REDUCED BY PAID CLAIMS.

CoverageType	Insurer	Policy	EffectiveDate	ExpirationDate	LimitType	Amount
Workers Compensation and Employer Liability						
	Safety National Casualty Corporation	SP 4050951	01-Jul-2014	01-Jul-2015	Statutory	
					E.L. Each Accident	$1,000,000
					Disease - Each Employee	$1,000,000
					S.I.R.	$750,000

DESCRIPTION OF OPERATIONS/LOCATIONS/VEHICLES/EXCLUSIONS ADDED BY ENDORSEMENTS/SPECIAL PROVISIONS
THIS CERTIFICATE IS ISSUED FOR EVIDENCE OF COVERAGE ONLY WITH RESPECTS THE SANITARY SEWER MAINTENANCE SERVICES FOR THE TOWN CENTER SEWER ASSESSMENT DISTRICT (TCSAD).

IMPORTANT If the certificate holder is an ADDITIONAL INSURED, the policy(ies) must be endorsed. A statement on this certificate does not confer rights to the certificate holder in lieu of such endorsement(s). If SUBROGATION IS WAIVED, subject to the terms and conditions of the policy, certain policies may require an endorsement. A statement on this certificate does not confer rights to the certificate holder in lieu of such endorsement(s).

DISCLAIMER The Certificate of Insurance on this form does not constitute a contract between the issuing insurer(s), authorized representative or producer, and the certificate holder, nor does it affirmatively or negatively amend, extend or alter the coverage afforded by the policies listed thereon.

CERTIFICATE HOLDER

Town of Woodside 17376 - 2401

2955 Woodside Road
Woodside, CA 94062
Attn: Paul T. Nagengast (Deputy Town Manager)

CANCELLATION

SHOULD ANY OF THE ABOVE DESCRIBED POLICIES BE CANCELLED BEFORE THE EXPIRATION DATE THEREOF, NOTICE WILL BE DELIVERED IN ACCORDANCE WITH THE POLICY PROVISIONS.

AUTHORIZED REPRESENTATIVE

CERTIFICATE OF COVERAGE

30-Oct-2014

PRODUCER

Alliant Insurance Services, Inc.
100 Pine Street
11th Floor
San Francisco, CA 94111 (415) 403-1400

THIS CERTIFICATE IS ISSUED AS A MATTER OF EVIDENCE ONLY AND CONFERS NO RIGHTS UPON THE CERTIFICATE HOLDER. THIS CERTIFICATE DOES NOT AFFIRMATIVELY OR NEGATIVELY AMEND, EXTEND OR ALTER THE COVERAGE AFFORDED BY THE MEMORANDUM(S) OF COVERAGE (MOC) BELOW.

THIS CERTIFICATE OF COVERAGE DOES NOT CONSTITUTE A CONTRACT BETWEEN THE ISSUING INSURER, AUTHORIZED REPRESENTATIVE OR PRODUCER, AND THE CERTIFICATE HOLDER.

INSURED West Bay Sanitary District
Member of CSRMA
500 Laurel Street
Menlo Park, CA 94025-

97

MEMORANDUM OF COVERAGE NUMBER

CSWC WBSB 1415 1

PROGRAM AFFORDING COVERAGE

California Sanitation Risk Management Authority (C.S.R.M.A.)

COVERAGES

THIS IS TO CERTIFY THAT THE COVERAGE IS AFFORDED TO THE ABOVE NAMED MEMBER, AS PROVIDED BY THE MEMORANDUM(S) OF COVERAGE, FOR THE COVERAGE PERIOD SHOWN BELOW, NOTHWITHSTANDING ANY REQUIREMENT, TERM OR CONDITION OF ANY CONTRACT OR OTHER DOCUMENT WITH RESPECT TO WHICH THIS CERTIFICATE MAY BE ISSUED OR MAY PERTAIN. THE COVERAGE AFFORDED BY THE PROGRAM DESCRIBED HEREIN IS SUBJECT TO ALL THE TERMS, EXCLUSIONS, AND CONDITIONS OF SUCH MEMORANDUM(S) OF COVERAGE. THE FOLLOWING COVERAGE IS IN EFFECT:

PUBLIC ENTITY LIABILITY IS DEFINED IN THE MEMORANDUM(S) OF COVERAGE ON FILE WITH THE ENTITY, AND COPIES ARE AVAILABLE ON REQUEST.

Type Of Coverage: Public Entity Liability Including:	EffectiveDate	ExpirationDate	S.I.R.	Deductible	Liability Limit Per Occurrence
Worker's Compensation (Coverage)					
Limit	01-Jul-2014	01-Jul-2015	-	-	$750,000

DESCRIPTION OF OPERATIONS/LOCATIONS/VEHICLES/EXCLUSIONS ADDED BY ENDORSEMENTS/SPECIAL PROVISIONS
THIS CERTIFICATE IS ISSUED FOR EVIDENCE OF COVERAGE ONLY WITH RESPECTS THE SANITARY SEWER MAINTENANCE SERVICES FOR THE TOWN CENTER SEWER ASSESSMENT DISTRICT (TCSAD).

CERTIFICATE HOLDER

Town of Woodside 17376 - 2402

2955 Woodside Road
Woodside, CA 94062
Attn: Paul T. Nagengast (Deputy Town Manager)

CANCELLATION

SHOULD ANY OF THE ABOVE DESCRIBED MEMORANDUM(S) OF COVERAGE BE CANCELLED BEFORE THE EXPIRATION DATE THEREOF, NOTICE WILL BE DELIVERED IN ACCORDANCE WITH THE MEMORANDUM(S) OF COVERAGE PROVISIONS.

AUTHORIZED REPRESENTATIVE

WEST BAY
Sanitary District

WEST BAY SANITARY DISTRICT
AGENDA ITEM 7

To: ***Board of Directors***

From: ***Liz Bahrami, District Accountant***

Subject: ***Consideration to Approve the Pre-Audit Preliminary FY2017-18 Internal Financial Statements & Analysis of Financial Position for the Fiscal Year ending 6/30/2018***

Background

Attached for the Board's review are the District's Pre-Audit Preliminary Internal Financial Statements & Analysis of Financial Position for Fiscal Year 2017-2018.

- **Total Revenues** for the fiscal year ending June 30, 2018 were $28,369,611. This exceeds full year Budget by $1.4 million and results from favorable variances in all revenue sources with the exception of a shortfall from the maintenance agreement with the towns of Los Altos Hills and Woodside. Compared to prior year, Total Revenue was $314.5K higher and resulted primarily from the increase in sewer service fees.
- ***Sewer Service Fees.*** Sewer Service Fee revenue recognized during the year totaled $26,388,570. This exceeded Budget by $992,929 or 4.0% resulting from an increase in residential accounts that came online during the year from several new multi-family residential properties developed within the District.
- ***Permit & Inspection Fees and Connection Fees***. During the year the District received $292,887 in Permit Fees and $570,181 in Connection Fees. Both are a direct result of the continued mixed use commercial and residential expansion occurring within the District.
- ***Flow Equalization*** exceeded Budget for the year by $2.9K due to a higher than anticipated CPI increase over the prior year.
- ***Other Operating Income – Los Altos Hills and Woodside*****.** Revenue from the outside maintenance agreements generated $264,232 from Los Altos Hills (LAH) and $25,124 from the Town of Woodside (TOW)**.** Revenue from both contracts fell short of Budget. LAH with a total shortfall of $105.1K resulted from significantly fewer sewer overflows

than anticipated. The Town of Woodside fell short of Budget by $32.2K due to the Town's decision to not clean the entire system which had been originally included in the Budget. The revenue from these contracts is largely offset by the labor and equipment cost to service these maintenance agreements.

- ***Interest Income & Gain/(Loss) on Marketable Securities.*** During the year, the reserve funds, with a collective year-end balance of $27,171,605, increased in market value by $80,450. Including accrued interest, the reserves ended the year with the following balances: **Operating Reserve** $7,931,098; **Emergency Capital Reserve** $5,314,622; **Capital Project Reserve** $3,638,450; **Rate Stabilization Reserve** $5,577,745; **Recycled Water Cash Flow Reserve** $3,899,478; and the **Recycled Water SRF Reserve** $810,212. The Recycled Water SRF Reserve was opened in March and funded by Sharon Heights Golf & Country Club (SHGCC) as a requirement of the SRF contract. The earnings on this reserve will accrue to the benefit of SHGCC.

  The interest received from **LAIF** of $196,021 and **Bank of the West Money Market** of $12,452 exceeded Budget collectively by $158.5K. During the year, interest rates offered by LAIF increased steadily, increasing from just under 1% at the beginning of the fiscal year to nearly 2% at year end. Because of the favorable rates offered by LAIF, maturities in the Recycled Water Cash Flow Reserve were transferred to LAIF to provide liquidity to meet the project's cash flow needs while taking advantage of the increasing rates. A total of $4,215,149 in maturities were transferred to LAIF. While the interest rate from LAIF was increasing during year, the interest rate offered on our Bank of the West Money Market declined to 0.33%. Therefore, receipts of sewer service fees received from the County were also deposited into LAIF. The LAIF balance at year end was $24,531,153.

  The **PARS Irrevocable Trust** set up in FY2016-17 to fund the other post-employment benefits (OPEB) ended the year with a value of $247,323 gaining $12,089, or 5.14% (net of fees).

- **Total Expenses** for the year of $20,379,635 were $872.8K, or 4.1% favorable to the full year Budget. Favorable variances were realized in most all expense categories, with the exception of the Election Expense, Memberships, and the SVCW 2018 Bond issue. The Election Expense was $8.2K negative resulting from the fee charged by the County to change our District Board member elections from odd to even years. Memberships

were $13.3K negative due to the tripling of cost for the Underground Service Alert membership and unbudgeted California Special Districts Association membership. The expense for the 2018 SVCW Bond payment exceeded Budget by $480.9K and is timing related resulting from the significantly larger payment due in August than in February. Compared to prior year, total expenses were $2.4K higher, resulting primarily from increased SVCW debt.

- **Capital** spending for the year was $6,310,709, or 63% of the total year Capital Budget.

  Administration: $5.8K spent on District Office improvements; $11.3K on Levee Survey & GPS Update; $31.7K on the Flow Monitoring Study; and $45.0K on the Sewer System Model Software.

  Collection Facilities: Capital spending included $5.7K on purchase of 2 Smart Cover manhole covers; and $74.0K on FERRF upgrades.

  Expenditures funded through the Equipment Replacement Fund:

  A total of $193.5K was spent from the Equipment Replacement fund on the following capital acquisitions: $13.5K on improvements to the District's water truck; $109.3K on purchase of an F550 pickup w/utility bed for Rehab (Unit 209); $34.1K for an F150 pickup for the Construction Inspector (Unit 221); and $36.6K for 2 Flo Dar monitors.

  Pump Station, Pipeline Replacement, Engineering, and Construction:

  Pump station spending included $56.4K on pump station upgrades.

  Design and Engineering for pipeline projects included: $66.1K carryover on Belle Haven II – Sharon Rd. change order.

  Construction spending for pipeline projects included: $2.78M for completion of the Belle Haven II during Q4;

  Reserve Transfers:

  Vehicle & Equipment Replacement Fund - $250K was transferred from the Capital Asset Fund to Vehicle & Equipment Replacement Fund.

  Rate Stabilization Reserve – In August, $2.6M was transferred to the Rate Stabilization/Bond Reserve. Of this amount, $1.6M was from underspending in Non-Operating Expense (SVCW) in the prior FY16-17 and $1.0M per the FY2017-18 Budget.

  Resource Recovery: Spending during the fiscal year on the Sharon Heights Recycled Water facility project totaled $957.3K and $169.9K for Bayfront. These expenditures are being tracked separately in the Capital Asset Fund. The cost of the Sharon Heights project is expected to be reimbursed by the State through the SRF loan and the State

has approved a $75K reimbursement of the $169.9K for Bayfront feasibility study when complete.

Fiscal Impact

- Total Revenues for the year were favorable to Budget by $1,411,578.
- Total Expenses for the year were favorable to Budget by $872,788.
- Cash and Investment balances increased by $8.8M over prior year with a cash and investment securities balance at year-end of $54,069,154 and accrued interest of $278,195.

Recommendation

The District Accountant recommends the Board consider to accept the Preliminary Fiscal Year FY2017-18 Internal Financial Statements & Analysis of Financial Position as of Year End June 30, 2018.

WEST BAY SANITARY DISTRICT
AGENDA ITEM 8

To: ***Board of Directors***

From: ***Phil Scott, District Manager***

Subject: ***Discussion and Direction on Recycled Water Projects – Sharon Heights and Bayfront, Including Project Status***

A discussion will be held on the Recycled Water Projects – Sharon Heights and Bayfront Facility and other events related to the recycled water project including financing, design/build issues and grant applications. The Board will have opportunity to provide direction to staff and legal counsel.

The following is a disclosure statement required for any document, written report or brochure prepared in whole or in part pursuant to the Finance Agreement with the State Water Resources Control Board for the West Bay Sanitary District Recycled Water Project - Sharon Heights:

Funding for this project has been provided in full or in part through an agreement with the State Water Resources Control Board. California's Clean Water State Revolving Fund is capitalized through a variety of funding sources, including grants from the United States Environmental Protection Agency and state bond proceeds. The contents of this document do not necessarily reflect the views and policies of the foregoing, nor does mention of trade names or commercial products constitute endorsement or recommendation for use.

THIS PAGE LEFT INTENTIONALLY BLANK

WEST BAY SANITARY DISTRICT
AGENDA ITEM 9

To: ***Board of Directors***

From: ***Phil Scott, District Manager***

Subject: ***Report & Discussion on South Bayside Waste Management Authority (SBWMA)***

The District's representative to South Bayside Waste Management Authority (SBWMA), Secretary Fran Dehn, will report on and any pertinent items regarding SBWMA business.

THIS PAGE LEFT INTENTIONALLY BLANK

WEST BAY SANITARY DISTRICT
AGENDA ITEM 10

To: ***Board of Directors***

From: ***Phil Scott, District Manager***

Subject: ***Report & Discussion on Silicon Valley Clean Water (SVCW) and Discussion on SVCW CIP Program and Financing***

The District's representative to Silicon Valley Clean Water (SVCW), George Otte, will report on any pertinent items regarding SVCW including the Commission regular meeting held on July 12, 2018 and the upcoming meeting on August 23, 2018.

THIS PAGE LEFT INTENTIONALLY BLANK