1902 - Serving Our Community for over 115 Years - 2019

WEST BAY SANITARY DISTRICT
AGENDA OF BUSINESS
SPECIAL MEETING OF THE DISTRICT BOARD
WEDNESDAY, JULY 17, 2019 AT 7:00 P.M.
RONALD W. SHEPHERD ADMINISTRATION BUILDING,
500 LAUREL STREET, MENLO PARK, CALIFORNIA 94025

Board Members
Fran Dehn, President
George Otte, Secretary
Roy Thiele-Sardiña, Treasurer
David Walker, Member
Edward P. Moritz, Member

District Manager
Phil Scott

District Legal Counsel
Anthony Condotti, Esq.

AGENDA OF BUSINESS

NOTE: The Board may take action on any agendized item unless specifically designated a "discussion" item or a "report."

1. Call to Order and Roll Call
2. Communications from the Public
3. Public Hearing: Consideration of Resolution Confirming Report on Sewer Service Charges for West Bay Sanitary District for the Fiscal Year 2019/2020 Pg. 3-1
4. Consideration of Resolution Confirming Report on Sewer Service Charges for West Bay Sanitary District for the Fiscal Year 2019/2020 Pg. 4-1
5. District Manager's Report Pg. 5-1
6. Consent Calendar

Matters listed under this item are considered routine and will be enacted by one motion. The motion, seconds, and vote are applicable to any included resolutions and recorded accordingly. There will be no separate discussion of these items unless specifically requested by a member of the Board.

A. Approval of Minutes for Regular meeting June 26, 2019 Pg. 6A-1

B. Approval of the Withdrawal Order Authorizing Payment of Certain Bills and Salaries and Consideration of Other Financial Matters for July 17, 2019 Pg. 6B-1

C. Consider to Ratify and Approve Report on District's Investment Portfolio Including the Transactions of Assets Described Therein as of 6/30/19 Pg. 6C-1

D. WBSD Operations and Maintenance Report – June 2019 Pg. 6D-1

E. Town of Los Altos Hills Operations and Maintenance Report for Work Performed by WBSD – June 2019 Pg. 6E-1

F. Consideration of a Resolution of Intention to Annex Certain Territory (30 Holden Court) to the West Bay Sanitary District On-Site Wastewater Disposal Zone and to Establish the Date and Time of Public Hearing Pg. 6F-1

7. Consider Approval of Resolution to Authorize the District Manager to Execute an Operations & Maintenance Agreement with State of California Through the Department of Transportation (Caltrans) for the Recycled Water Pipeline Within the State Right of Way Pg. 7-1

8. Consideration of Authorizing District Manager to Enter into an Agreement for Adjustment of Sanitary Sewer Manholes with the City of Menlo Park for the 2019 Street Resurfacing Project Pg. 8-1

9. Discussion and Direction on Recycled Water Projects - Sharon Heights & Bayfront, Including Project Status Pg. 9-1

10. Report & Discussion on South Bayside Waste Management Authority (SBWMA) Pg. 10-1

11. Report & Discussion on Silicon Valley Clean Water (SVCW) and Discussion on SVCW CIP Program and Financing Pg. 11-1

12. Closed Session:

A. CONFERENCE WITH LABOR NEGOTIATORS
(Pursuant to Cal. Govt. Code §54957.6)Agency designated representatives: District Manager, Legal Counsel, IEDA;
Employee Organization: Exempt Employees, Unrepresented Employees, & Teamsters Local 350

B. CONFERENCE WITH LEGAL COUNSEL – EXISTING LITIGATION
(Cal. Govt. Code §54956.9(d)) Name of Case: *1740 Oak Avenue, LP v. West Bay Sanitary District, et al.* – SMCSC Case No. 18CIV02183

13. Consideration to Approve and Adopt the Memorandum of Understanding Between West Bay Sanitary District and the Sanitary Truck Drivers and Helpers International Brotherhood of Teamsters, Local 350 and Authorize the President of the District Board to Execute the Memorandum of Understanding Pg. 13-1

14. Consider Adoption of Resolution Establishing Rates of Pay and Related Compensation Provisions Pg. 14-1

15. Comments or Reports from Members of the District Board and Consider Items to be Placed on Future Agenda

16. Adjournment

The West Bay Sanitary District does not discriminate against persons with disabilities. Upon request, the agenda and agenda packet can be provided in a format to accommodate special needs. If you require a copy of the agenda or related materials in an alternative format to accommodate a disability, or if you wish to attend this public meeting and will require special assistance or other special equipment, please call the District at (650) 321-0384 at least five days in advance and we will make every reasonable attempt to provide such an accommodation.

WEST BAY SANITARY DISTRICT
AGENDA ITEM 3

To: ***Board of Directors***

From: ***Phil Scott, District Manager***

Subject: ***Public Hearing: Consideration of Resolution Confirming Report on Sewer Service Charges for West Bay Sanitary District for the Fiscal Year 2019/2020***

Background

Pursuant to Article IX; Section 900 (10) of the General Code of Regulations, the District collects annual sewer service charges (SSCs) on the tax roll of the County of San Mateo at the same time as property taxes, assessments and other charges collected thereon by the County.

The District Manager shall prepare and file with the District Secretary on or before the 15th day of July a written report containing a description and the SSC amount for each parcel receiving sewer service. Then the District shall cause notice of a time and place of hearing to consider any objections or protest to the sewer service charges.

On April 24, 2019, the District Board held a public hearing to establish SSCs for fiscal year 2019/2020 in accordance with Proposition 218. The established SSC for fiscal year 2019/2020 is $1,177 for a single-family residence (SFR) and $1,497 for SFRs within the On-site Wastewater Disposal Zone (OWDZ). Non-residential users are calculated based on water consumption and type of use so charges will vary, but no non-residential user shall be charged less than the established SFR.

On June 12, 2019, the District Board established July 17, 2019 at 7:00 pm as the date and time of the Public Hearing to consider any objections or protest to the sewer service charges to be collected on the tax roll for the Fiscal Year 2019/2020.

Analysis

After closing the Public Hearing, the Board is asked to adopt the “Resolution Confirming Report on Sewer Services Charges for FY 2019/2020”, which states that objections and protests against the report were not made by the owners of a majority of the properties against which charges were fixed at the Public Hearing held July 17, 2019. The Resolution further states that the charges will be collected on the FY 2019/2020 tax roll.

Fiscal Impact

The Fiscal Year 2019-2020 budget estimated annual SSC revenues to be $30,561,915.00. The final report anticipates revenues to be a total SSC revenue of $29,830,482.61. The $731,432.39 shortfall was mainly from a major industrial user slowing down production sooner than expected. Staff traditionally does not spend all of the operations expense dollars and the District typically gets more revenue in permit and connection fees than budgeted. Additionally, staff proposes to look at it mid-year and if it appears we may be having difficulty meeting the budgeted revenue with the above measures, we could defer up to $850k of contributions to reserves (Rate stabilization and Capital Projects reserves).

Recommendation

The District Manager recommends, following the close of Public Hearing, that the District Board adopt the Resolution Confirming Report on Sewer Service Charges for Fiscal Year 2019-2020.

WEST BAY SANITARY DISTRICT
AGENDA ITEM 4

To: ***Board of Directors***

From: ***Phil Scott, District Manager***

Subject: ***Consideration of Resolution Confirming Report on Sewer Service Charges for West Bay Sanitary District for the Fiscal Year 2019/2020***

Following the Public Hearing, the Board is asked to approve the attached Resolution confirming the report on Sewer Service Charges for Fiscal Year 2019-2020.

Attachment: Resolution____ (2019)
San Mateo County Controller Letter

RESOLUTION NO. _____ (2019)

A RESOLUTION CONFIRMING REPORT ON SEWER SERVICE CHARGES FOR WEST BAY SANITARY DISTRICT FOR THE FISCAL YEAR 2019/2020 IN THE DISTRICT BOARD OF THE WEST BAY SANITARY DISTRICT COUNTY OF SAN MATEO, STATE OF CALIFORNIA

*****

WHEREAS, this Board did, on April 17, 1974 adopt General Regulation No. 55, whereby this Board elected to collect sewer service charges on the tax roll and provided for annual preparation and filing of a written report containing description of each parcel of real property receiving services and facilities from the District and the amount of the service charge for each parcel for each fiscal year; and

WHEREAS, these provisions have been amended from time to time and are presently contained in the District's "Code of General Regulations" adopted by General Regulation No. 58 on November 22, 1982; and

WHEREAS, said written report for fiscal year 2019/2020, July 1, 2019-June 30, 2020 was prepared and filed with the Secretary on June 12, 2019; and

WHEREAS, in accordance with General Regulation No. 58, as amended, and all other applicable provisions of law, this Board appointed the time and place of hearing protests to said report and directed notice; and

WHEREAS, notice was given of the time therein stated in the manner provided by law as appears by the affidavits of publication on file at the District's offices; and

WHEREAS, said matter came regularly for hearing at the place and time fixed; and

WHEREAS, the highest charge amount is $975,971.50 and lowest charge amount is $1,177,00; and

WHEREAS, all written protests and other written communications were publicly read at said hearing and all persons desiring to be heard were fully heard; and

WHERAS, the Board finds that these fees have been reviewed and found to be in compliance with Proposition 218;

NOW, THEREFORE, IT IS ORDERED as follows:

1. That objections to and protest against said report were not made by the owners of a majority of the separate parcels of property described in the report against which charges for the services and facilities provided by the District were fixed

2. That said report be, and it is hereby, adopted and that said charges shall be collected on the tax roll of the County of San Mateo in the manner provided by law.

3. That the Secretary of this District is hereby directed to file with the County Controller of San Mateo County on or before the 1st day of August 2019 a copy of said report, upon which shall be endorsed, over their signature, a statement that the report has been finally adopted by the District Board of the West Bay Sanitary District.

4. The County Controller of San Mateo County shall, upon receipt of said report, enter the amounts of the charges against the respective lots or parcels as they appear on the assessment roll for fiscal year 2019-2020.

*****

Passed and adopted by the District Board of West Bay Sanitary District at a special meeting thereof held on the 17th day of July, 2019 by the following vote:

Ayes:

Noes:

Abstain:

Absent:

_____
President of the District Board of the
West Bay Sanitary District, County of
San Mateo, State of California

Attest:

_____
Secretary of the District Board of the
West Bay Sanitary District, County
of San Mateo, State of California

WEST BAY SANITARY DISTRICT

Serving Our Community Since 1902

500 Laurel Street, Menlo Park, California 94025-3486 **(650) 321-0384** (650) 321-4265 FAX

PHIL SCOTT
District Manager

In reply, please refer to our
File No.

1250.3

July 17, 2019

Mr. Juan Raigoza
County Controller
County of San Mateo
555 County Center, 4th Floor
Redwood City, CA 94063

Dear Mr. Raigoza:

This is to state that at the July 17, 2019 Special Meeting of the West Bay Sanitary District Board, the Board did adopt the written report referred to in Section 5473 of the Health and Safety Code of the State of California. This adoption was made pursuant to the provisions of Section 5473.4 of the Health and Safety Code of the State of California. A copy of the written report is herewith filed with you.

I am the Secretary of the District Board of the West Bay Sanitary District. I certify under penalty of perjury the above is true and correct.

Very truly yours,

WEST BAY SANITARY DISTRICT

_____

Secretary of the District Board

cc: Shirley Tourel, Assistant Controller; Matthew Slaughter Property Tax Manager, Real Property Section, County Controller's office, 555 County Center, 4th Floor, Redwood City, CA 94063

WEST BAY SANITARY DISTRICT
AGENDA ITEM 5

To: ***Board of Directors***

From: ***Phil Scott, District Manager***

Subject: ***District Manager's Report***

1) **CIP Project:**
   a. **Belle Haven III**: CIP construction began July 23. 98% complete. Started Winchester easement and working on punch list item.
   b. **FERRF Metal Storage Building Update**: Modified design to accommodate for soils report. Submitted to City.
   c. **FERRF Levee Project**: Attended meeting with Army Corp and Regional Board to discuss FERRF Levee Improvement Project and Bayfront Recycled Water Treatment Facility Project and a combined EIR. Discussed sheet piling along the Flood Slough and enhancing the West Slough habitat with a Living Shoreline concept to protect the site from King Tides and Sea Level Rise. Submitted additional information as requested to supplement our application for IRWM grant for a combined project with the Bayfront Recycled Water project.
2) **Affiliate Agency/Association News**:
   a. **Facebook ORTP:** A draft provisional Discharge permit has been written and is being reviewed for Facebook for their Onsite Reuse Treatment Plant. Cannot issue the provisional permit until the State has fully permitted operation of the plant.
3) **Upcoming Events:**
   a. **Board meetings**: July 17 and August 14.
   b. **Union Negotiations:** Presenting MOU for approval July 17.
4) **Misc./Action Items from Previous Meeting**:
   a. **SSOs:** One SSO for June. 2019 Total = 4.
   b. **10 Coyote Hill, PV:** Geotech firm through F&L Engineering performed soil boring March 29th, to help determine cause of erosion on hillside within District easement, document and develop engineering plan for remediation. Reviewing soils report and recommendations.

THIS PAGE LEFT INTENTIONALLY BLANK

1902 - Serving Our Community for over 110 Years - 2019

WEST BAY SANITARY DISTRICT
MINUTES OF THE REGULAR MEETING OF THE DISTRICT BOARD
WEDNESDAY, JUNE 26, 2019 AT 7:00 P.M.

1. Call to Order

President Dehn called the meeting to order at 7:00 PM

Roll Call

BOARD MEMBERS PRESENT:	Dehn, Otte, Walker, Moritz
BOARD MEMBERS ABSENT:	Thiele-Sardiña
STAFF MEMBERS PRESENT:	Ramirez, Condotti
Others Present:	Matt Anderson – Silicon Valley Clean Water

2. Communications from the Public: None.

3. Consider Adoption of a Resolution Authorizing the West Bay Sanitary District to Revise the Allocable Share from the Previously Approved 28.43% to 30.5% (as defined in the Amendment to the Financing Agreement) of Debt Service on the Silicon Valley Clean Water 2019 Wastewater Revenue Notes and the Water Infrastructure Finance and Innovation Act Loan (WIFIA Loan) and to Authorize an Amendment to the Financing Agreement Previously Authorized on May 22, 2019

Motion by: Moritz 2nd by: Walker Vote: AYE: 4 NAY: 0 Abstain: 0

Comments: Matt Anderson presented to the board a report on the plant's revised plan regarding borrowing more money from SRF (1.3% interest) loans instead of WIFIA (2.4% interest) loans. Motion by Director Moritz to approve the revised allocable share to 30.5% and authorize an amendment to the Financing Agreement.

4. District Manager's Report

Comments:

1) **CIP Project:**
   a. **Belle Haven III**: CIP construction began July 23. 98% complete. Started Winchester easement and working on punch list item.
   b. **FERRF Metal Storage Building Update**: Modifying design to accommodate for soils report. Submitted to City, City request site visit for June 25.
   c. **FERRF Levee Project**: Scheduling a meeting with Army Corp and Regional Board to discuss the strip of CMPK land between FERRF and Bay and whether sheet piling will be acceptable. Submitted application for IRWM grant for a combined project with the Bayfront Recycled Water project.
2) **Affiliate Agency/Association News**:

a. **Facebook ORTP:** A draft provisional Discharge permit has been written and is being reviewed for Facebook for their Onsite Reuse Treatment Plant. Cannot issue the provisional permit until the State has fully permitted operation of the plant.

b. **Block Party:** Was on June 12 Staff had a booth for public outreach and the water truck on exhibit.

c. **State Water Quality Control Board:** The State is proposing changes to the Waste Discharge Permit for Collection Systems and is looking to require Infrastructure Vulnerability Assessments and Climate Action Plans to be included possibly for 2020.

3) **Upcoming Events:**
   a. **Board meetings**: June 26, July 17 and August 8.
   b. **Union Negotiations:** Held third meeting June 14..

4) **Misc./Action Items from Previous Meeting**:
   a. **SSOs:** One SSO for June. 2019 Total = 4.
   b. **10 Coyote Hill, PV:** Geotech firm through F&L Engineering performed soil boring March 29th, to help determine cause of erosion on hillside within District easement, document and develop engineering plan for remediation. Reviewing soils report and recommendations.

5. Consent Calendar

A. Approval of Minutes for Regular meeting June 12, 2019

B. Approval of the Withdrawal Order Authorizing Payment of Certain Bills and Salaries and Consideration of Other Financial Matters for June 26, 2019

C. Consider to Ratify and Approve Report on District's Investment Portfolio Including the Transactions of Assets Described Therein as of 5/31/19

D. Consideration of Authorizing the District Manager to Issue the Class 3 Permit for the Sewer Manhole Rehabilitation at Menlo College, Atherton, CA

Motion by: Walker 2nd by: Otte Vote: AYE: 4 NAY: 0 Abstain: 0

CONSIDERATION OF ITEM(S) REMOVED FROM THE CONSENT CALENDAR

Comments: None.

6. **Consider Adoption Of Resolution Approving Amendment No.6 To The Maintenance Services Agreement Between West Bay Sanitary District And The Town Of Woodside For Sanitary Sewer Maintenance Services for The Town of Woodside And Authorize The District Manager To Execute the Amended Agreement On Behalf Of The District**

Motion by: Moritz 2nd by: Walker Vote: AYE: 4 NAY: 0 Abstain: 0

Comments: President Dehn asked if the contract covers overhead cost. Ramirez confirmed it does.

7. **Consider Adoption Resolution to Approve Amendment #6 to the Agreement for Root Foaming Services with Duke's Root Control Inc., and Authorize the District Manager to Execute Said Amendment**

Motion by: Moritz 2nd by: Walker Vote: AYE: 4 NAY: 0 Abstain: 0

Comments: None.

8. **Discussion and Direction on Recycled Water Projects - Sharon Heights & Bayfront, Including Project Status**

Comments: Ramirez reported that a structure has been built, and reimbursement paperwork for $1.6 million has been sent out, the District will be receiving it soon.

9. **Report & Discussion on South Bayside Waste Management Authority (SBWMA**)

Comments: None.

10. **Report, Discussion & Direction on Silicon Valley Clean Water (SVCW) and Discussion on SVCW CIP Program and Financing**

Comments: Director Otte reported the first pieces of the tunnel machine have arrived in Southern California from Germany. The pieces will be shipped to the SVCW plant to be assembled in place.

11. **Closed Session**

A. CONFERENCE WITH LABOR NEGOTIATORS
(Pursuant to Cal. Govt. Code §54957.6)Agency designated representatives: District Manager, Legal Counsel, IEDA;
Employee Organization: Exempt Employees, Unrepresented Employees, & Teamsters Local 350

B. CONFERENCE WITH LEGAL COUNSEL – EXISTING LITIGATION
(Cal. Govt. Code §54956.9(d)) Name of Case: *1740 Oak Avenue, LP v. West Bay Sanitary District, et al.* – SMCSC Case No. 18CIV02183

Entered closed session at 7:30 p.m. Left closed session at 8:31 p.m.

Reportable action: No reportable action.

12. Consideration to Approve and Adopt the Memorandum of Understanding Between West Bay Sanitary District and the Sanitary Truck Drivers and Helpers International Brotherhood of Teamsters, Local 350 and Authorize the President of the District Board to Execute the Memorandum of Understanding

~~Motion by: _____ 2nd by: _____ Vote: AYE: NAY: Abstain~~

Comments: No vote. This item was continued to the July 17, 2019 meeting.

13. Consider Adoption of Resolution Establishing Rates of Pay and Related Compensation Provisions

~~Motion by: _____ 2nd by: _____ Vote: AYE: NAY: Abstain~~

Comments: No vote. This item was continued to the July 17, 2019 meeting.

14. Comments or Reports from Members of the District Board and Consider Items to be Placed on Future Agenda

Comments: Director Moritz requested a discussion and map showing the next three years of CIPs for the next meeting.

15. Adjournment Time: The meeting was adjourned at 8:33 PM

WEST BAY SANITARY DISTRICT
WITHDRAWAL ORDER
July 17, 2019

CHECK	TO WHOM PAYABLE	PURPOSE	AMOUNT
65284	BANKCARD CENTER	Travel, Meetings & Training - A&G	2,144.60
65285	BANKCARD CENTER	Travel, Meetings & Training - A&G	1,135.49
65286	BANKCARD CENTER	Travel, Meetings & Training - A&G	833.04
65287	SAN MATEO COUNTY ASSESSOR	Other Operating Expense - A&G	305.00
65288	PRINCIPAL LIFE INSURANCE CO.	Employee Benefits - A&G / Coll	4,798.74
65289	TAP PLASTICS INC.	Operating Supplies - Coll	419.65
65290	CARRIE NEVOLI - PETTY CASH	Office Expense - A&G	152.51
65291	SAN MATEO COUNTY CLERK	Other Non Operating Expense - Deposits	98.00
65292	AT&T	Utilities - A&G	948.49
65293	READYREFRESH BY NESTLE	Utilities - Coll	204.51
65294	BAY ALARM	Contractual Services - A&G	4,149.42
65295	CALIFORNIA WATER SERVICE	Utilities - A&G	96.50
65296	CALPERS LONG-TERM CARE PROGRAM	Employee Benefits - A&G / Coll	26.61
65297	CINTAS CORP	Operating Expense - Coll	648.71
65298	COMCAST	Utilities - A&G	285.06
65299	ELITE PARTS LLC	Repairs & Maintenance - Coll	930.80
65300	FEDERAL EXPRESS	Office Expense - A&G	402.75
65301	GRAINGER	Operating Supplies - Coll	653.94
65302	KIMBALL MIDWEST	Operating Supplies - Coll	2,310.38
65303	HF&H CONSULTANTS, LLC	Professional Services - A&G	187.50
65304	MEDCO SUPPLY COMPANY	Operating Supplies - Coll	86.79
65305	CITY OF MENLO PARK	Operating Expense - Coll	76.30
65306	CITY OF MENLO PARK	Operating Expense - Coll	1,425.00
65307	OGASAWARA LANDSCAPE MAINT.	Contractual Services - A&G	400.00
65308	PACIFIC GAS & ELECTRIC	Utilities - A&G	1,294.83
65309	PREFERRED ALLIANCE	Professional Services - A&G	316.05
65310	SEEKZEN SYSTEMS	Professional Services - A&G	10,500.00
65311	SHARP BUSINESS SYSTEMS	Rents & Leases - Coll	273.08
65312	SHARP ELECTRONICS CORPORATION	Rents & Leases - Coll	411.33
65313	STAPLES CREDIT PLAN	Operating Expense - A&G	416.73
65314	TOSHIBA FINANCIAL SERVICES	Rents & Leases - Coll	266.44
65315	US BANK	Rents & Leases - Coll	135.94
65316	V.W. HOUSEN & ASSOCIATES	Professional Services - A&G	15,677.50
65317	VERIZON WIRELESS	Utilities - A&G	1,669.48
65318	WECO INDUSTRIES, INC.	Repairs & Maintenance - Coll	2,190.21
65319	WEST YOST & ASSOCIATES	Prof. Services - A&G	10,403.18
65320	ZOOM IMAGING SOLUTIONS, INC.	Rents & Leases - Coll	44.86
65321	DETECTION INSTRUMENTS	Repairs & Maintenance - Coll	327.79
65322	NAVIA BENEFIT SOLUTIONS	Employee Benefits - A&G/Coll	1,163.52
65323	MARIE RAMIREZ/SDU	Other Non Operating Expense - Wage Garnishment	508.62
65324	FRANCHISE TAX BOARD	Other Non Operating Expense - Wage Garnishment	250.00
65325	WOODARD & CURRAN	CIP - Professional Services - A&G	2,590.35
65326	SAFETY CENTER INC	Travel, Meetings & Training	2,604.00
65327	ISAC INC	Operating Supplies - Coll	3,290.75
65328	ISAC INC	Operating Supplies - Coll	3,290.75
65329	MATHESON TRI-GAS, INC.	Operating Supplies - Coll	45.80
65330	READYREFRESH BY NESTLE	Other Operating Expense - A&G	63.27
65331	CALIFORNIA WATER SERVICE	Utilities - A&G	18.38
65332	CINTAS CORP	Contract Services - Coll	832.35
65333	FREYER & LAURETA	CIP & Prof. Services - A&G	38,601.88
65334	GOLDSTREET DESIGN AGENCY, INC.	Professional Services - A&G	2,751.50
65335	LUCITY, INC.	Repairs & Maintenance - Coll	9,741.42
65336	MEDCO SUPPLY COMPANY	Operating Supplies - Coll	61.82
65337	SUTTER EAP	Employee Benefits - A&G / Coll	418.00
65338	R.A. NOSEK INVESTIGATIONS	Professional Services - A&G	610.00
65339	PACIFIC GAS & ELECTRIC	Utilities - A&G	1,114.17

65340	ZOOM IMAGING SOLUTIONS, INC.	Rents & Leases - Coll	339.96
65341	TEAMSTERS LOCAL NO. 350	Union Dues for July 2019	826.00
65342	AMERICAN MESSAGING	Utilities - A&G	64.36
65343	CALIFORNIA WATER SERVICE	Utilities - Coll	18.38
65344	CALPERS LONG-TERM CARE PROGRAM	LTC Witholding	26.61
65345	THE ALMANAC	Printing & Publications - A&G	198.00
65346	EXPRESS SAFETY, INC.	Operating Supplies - Coll	773.32
65347	GRAINGER	Operating Supplies - Coll	1,281.14
65348	GRANITE ROCK, INC.	Operating Supplies - Coll	1,033.13
65349	HANSEN SUPPLY COMPANY	Operating Supplies - Coll	4,159.88
65350	HOME DEPOT CREDIT SERVICES	Operating Supplies - Coll	693.00
65351	IEDA	Professional Services - A&G	760.00
65352	JANI-KING OF CA, INC - SFR/OAK	Contract Services - A&G	726.60
65353	KONE INC.	Contract Services - A&G	259.34
65354	LOG ME IN	Repairs & Maintenance - Coll	1,666.68
65355	CITY OF MENLO PARK	Utilities - Coll	839.18
65356	CITY OF MENLO PARK	Repairs & Maintenance - Coll	3,845.24
65357	CITY OF MENLO PARK-Fuel	Gasoline, Oil & Fuel - Coll	4,343.24
65358	MISSION CLAY PRODUCTS LLC	Operating Supplies - Coll	731.93
65359	MUNICIPAL MAINTENANCE EQUIP.	Repairs & Maintenance - Coll	1,667.98
65360	PACIFIC GAS & ELECTRIC	Utilities - A&G	2,720.21
65361	SAN MATEO COUNTY	Other Operating Expense - Coll	566.00
65362	SEEKZEN SYSTEMS	Professional Services - Coll	475.00
65363	TPX COMMUNICATIONS	Utilities - A&G / Coll	2,281.16
65364	VISION COMMUNICATIONS CO.	Rents & Leases - A&G	667.00
65365	WECO INDUSTRIES, INC.	Operating Supplies - Coll	54.57
		TOTAL CHECKS	165,621.70

WIRES

TRANSFER DATE	PURPOSE	
7/5/2019	Employee Payroll - Pay Period 6/21/2019-7/5/2019	91,301.72
7/5/2019	Federal Payroll Taxes	13,639.65
7/5/2019	State Payroll Taxes	5,510.82
7/5/2019	ICMA	8,460.03
7/5/2019	Director's Fees for June	2,860.00
7/5/2019	Prime Pay Fees	520.56
7/10/2019	CALPERS Medical	44,334.04
7/1/2019	SVCW Operations, Capital, Reserve Contributions for July	633,247.00
	WIRE TRANSFERS FROM BofW CHECKING	799,873.82
7/10/2019	Recology Franchise Fee Remittance	8,322.63
7/8/2019	SVCW - FEF Pond Annual Lease Fee	351,137.91
	WIRE TRANSFERS To BofW CHECKING	359,460.54

_____ _____

Secretary President

WITHDRAWAL ORDER
SUPPLEMENTAL PURCHASE REGISTER
07/17/2019

OPERATING SUPPLIES & OFFICE EXPENSE

CHECK	AMOUNT	VENDOR	DESCRIPTION
65302	2,310.38	KIMBALL MIDWEST	Assorted Abrasive Brushes, Welding Cables, & Various Copper Lugs
65318	2,190.21	WECO INDUSTRIES, INC.	Leader Hoses 20' x 1/2" and 20' x 1" With Couplings
65334	2,751.50	GOLDSTREET DESIGN AGENCY, INC.	Toilet & Trash Brochures

MISCELLANEOUS

CHECK	AMOUNT	VENDOR	DESCRIPTION
65284	2,144.60	BANKCARD CENTER	Water Truck - $606.42 Notary Training - $439.05 Fast Trak $620.35 Meetings $379.78
65306	1,425.00	CITY OF MENLO PARK	Pump Station Inspection - Willow Road, University Ave, & Hamilton Ave
65310	10,500.00	SEEKZEN SYSTEMS	Professional & Project Management for Outsourced IT Services & Security
65316	16,577.50	V.W. HOUSEN & ASSOCIATES	Professional & Project Management Services - District's Hydraulic Model for Collection System
65319	10,403.18	WEST YOST & ASSOCIATES	Engineering Services
65325	2,590.35	WOODARD & CURRAN	CIP - Recycled Water Facility - SHCGG
65326	2,604.00	SAFETY CENTER INC	Safety Training
65327	3,290.75	ISAC INC	240v Simplex Grinder Telemetry
65328	3,290.75	ISAC INC	240v Simplex Grinder Telemetry
65333	38,601.88	FREYER & LAURETA	Belle Haven III - $20,480 & SHGCC - $12,650.00 & Easement Study - $3009.38 & Levee Design - $1782.50
65335	9,741.42	LUCITY, INC.	One-Year Constant Connection Software Renewal License
65349	4,159.88	HANSEN SUPPLY COMPANY	Engraving Machine & Tool Kit
65354	1,666.68	LOG ME IN	Annual Subscription For VPN
65356	3,845.24	CITY OF MENLO PARK	Fleet Repairs and Maintenance
65357	4,343.24	CITY OF MENLO PARK-Fuel	Fleet - Gasoline, Oil, and Fuel
65359	1,667.98	MUNICIPAL MAINTENANCE EQUIP.	Fleet - Repairs & Maintenance for Unit 221 - Bushings, Flanges, and Shaft

WEST BAY SANITARY DISTRICT

SUMMARY OF FY2019-20 PAYMENTS
(Through Withdrawal Order
07/17/2019)

	TOTAL BY VENDOR 6/26/2019- 07/17/2019	WITHDRAWAL 7/17/2019
REGULAR PAYABLES		
A-A Lock & Alarm	-	
A-1 Rhino Liner	-	
A & B Trailer Hitch Inc.	-	
A & D Automatic Gate Access	-	
AAA Rentals	-	
ABAG Hazmat	-	
ADS LLC	-	
Academy X INC.	-	
Access	-	
Action Towing	-	
Ace Fire Equipment & Service	-	
Airgas USA, LLC	-	
Alan Steel & Supply Co.	-	
Albert Patino	-	
Allen Equipment Company, Inc.	-	
All Fence Company, Inc.	-	
Alliant Insurance Services Inc	-	
The Almanac	198.00	198.00
Alpha Analytical Laboratories	-	
Alpine Ladera Fuel Inc.	-	
American Industrial Pumps	-	
American Messaging	64.36	64.36
American Portables	-	
American Textile & Supply	-	
American Water Services	-	
American Water Works Assn.	-	
Andes Construction Inc.	-	
Anderson Pacific	-	
Andrighetto RA	-	
A M Consulting	-	
Aqua Natural Solutions	-	
Aquality Water Management Inc.	-	
Arrowhead	-	
Ascent Elevator Services Inc.	-	
Association of Bay Area Gov.	-	
AT&T	948.49	948.49
Atchison, Barisone & Condotti	-	
Town of Atherton	-	
AW Direct	-	
Aztec Consultants	-	
BHI Management Consulting	-	
Backflow Prevention Specialist	-	
Baggengineers	-	
Bayside Heating & Air	-	
Bankcard Center	4,113.13	4,113.13
S.G. Banks, Inc	-	
Victor Garcia	-	
Barker Blue	-	
Andres Barriga	-	
Bay Alarm	4,149.42	4,149.42
Bay Area Air Quality	-	
Bay Area Barricade Service Inc	-	
Bay Area Clean Water Agencies	-	
Bay Area Paving Co. Inc.	-	
Bay Reprographic, Inc.	-	
Bayside Equipment Company	-	
Bayside Fire Protection Inc.	-	
Bay Area Clean Water Agencies	-	
Bell Electrical Supply, Inc.	-	
Annette Bergeron - Petty Cash	-	
Jed M. Beyer	-	
Black Pepper	-	
Blue Oaks Reimb Agrmnt Participants	-	
Bobcat West	-	
Boyce Reimb Agreement Participants	-	

WEST BAY SANITARY DISTRICT

SUMMARY OF FY2019-20 PAYMENTS
(Through Withdrawal Order
07/17/2019)

	TOTAL BY VENDOR 6/26/2019- 07/17/2019	WITHDRAWAL 7/17/2019
REGULAR PAYABLES		
Boy Scout Troop 222	-	
Brothers Mail Order Ind Inc	-	
Bruce Barton Pump Service	-	
Buchanan Automation Inc.	-	
Buja, Mejia, Sausal Creek Assoc Reim Agrmnt	-	
Buckles-Smith	-	
Burke, Williams & Sorensen	-	
CA-NV AWWA	-	
CDPH-OCP	-	
CDTFA	-	
CDW Government	-	
CRAgency, Inc.	-	
CWEA,Sfbs	-	
CWEA-SCVS	-	
CWEA-SAS	-	
CWEA-SFSB	-	
CWEA	-	
CWEA TCP	-	
CWEA Workshops	-	
CASA	-	
CSDA	-	
CSRMA C/O Alliant Insurance	-	
CSR Graphics	-	
State of California	-	
Calif Special Districts Assn.	-	
California Commerce	-	
Calif. Labor Law Poster Servic	-	
California Trenchless Inc.	-	
Calif. Utilities Emergency Assc	-	
State Water Resources Control	-	
California Water Service	133.26	133.26
Calpers Long-Term Care Program	53.22	53.22
Calpers Fiscal Services Div.	-	
Cal-Steam	-	
Caltrans	-	
Cardiac Science Corp.	-	
Carrie Nevoli - Petty Cash	152.51	152.51
Center For Hearing Health Inc.	-	
Central Supply Co., Inc.	-	
Century Carpet, Inc.	-	
Chemsearch	-	
Chevron	-	
Chavan & Associates LLP	-	
Christian Brothers Lining, Co.	-	
Christopher Jones	-	
Cintas Corp	1,481.06	1,481.06
Citibank	-	
Coker Pump & Equipment Company	-	
Comcast	285.06	285.06
Commercial Capital Company Llc	-	
Comtread Inc.	-	
CPS HR Consulting	-	
Corrosion Engineering Assoc.	-	
Heath Cortez	-	
Costco Membership	-	
County Specialty Gases	-	
Cues	-	
CUSI	-	
Custom Tops, Inc.	-	
DKF Solutions Group	-	
D & L Supply	-	
D & S Sales	-	
Dale Scott & Co., Inc.	-	
Peggy Daniels	-	
Davey Tree Expert Company	-	
The Definitive Deodorant Co.	-	
Dell Marketing L.P.	-	

WEST BAY SANITARY DISTRICT

SUMMARY OF FY2019-20 PAYMENTS
(Through Withdrawal Order
07/17/2019)

	TOTAL BY VENDOR 6/26/2019- 07/17/2019	WITHDRAWAL 7/17/2019
REGULAR PAYABLES		
Delta Diablo Sanitation Dist.	-	
Deluxe	-	
Dept. of Industrial Relations	-	
Dept of Motor Vehicles	-	
Detection Instruments	327.79	327.79
Dewey Pest Control	-	
Direct Safety	-	
Dolphin Graphics	-	
Downtown Ford Sales	-	
Ducky's Car Wash	-	
Duke's Root Control, Inc	-	
Du-All Safety, Llc	-	
Susan Dunlap	-	
ESRI	-	
Eagle United U.S.A., Inc.	-	
East Bay Muni Utility District	-	
City of East Palo Alto	-	
Eco Office	-	
Electro-Stock Inc	-	
Elite Parts LLC	930.80	930.80
Embarcadero Media	-	
Environmental Bio Int., Llc	-	
EnviroZyme	-	
Express Safety, Inc.	773.32	773.32
Fanton Reimbursement Recipients	-	
Fastenal Company	-	
Fast Response On-Site Testing	-	
Federal Express	402.75	402.75
Fremont Urgent Care	-	
Finishmaster Inc	-	
City of Foster City	-	
Four Star Automotive, Inc.	-	
Franchise Tax Board	250.00	250.00
Freyer & Laureta	38,601.88	38,601.88
Full Source, LLC	-	
G3 Engineering, Inc	-	
GCVSC (Grtr Centrl Valley Coll Syst)	-	
Gaffigan Company	-	
Gardenland Power Equipment	-	
Gardini Electric Co. Inc.	-	
Garratt Reimbursement Recipients	-	
Angus Gavin	-	
Gearbox	-	
General Hardware & Bldrs Suppl	-	
Getgo, Inc.	-	
Givat Partnership	-	
Golden Gate Truck Center	-	
Golden Oak Reimb Agrmnt Participants	-	
Golden Street Printing Co	-	
Goldstreet Design Agency, Inc.	2,751.50	2,751.50
Grainger	1,935.08	1,935.08
Granite Rock, Inc.	1,033.13	1,033.13
Guardian Life Insurance Co.	-	
HDPE Supply	-	
HF&H Consultants, LLC	187.50	187.50
H & R Plumbing & Drain	-	
Hach Company	-	
Hagemeyer North America, Inc.	-	
Hadronex, Inc.	-	
Half Moon Bay Grading & Paving	-	
Hansen Supply Company	4,159.88	4,159.88
Harben California	-	
Harbor Ready-Mix	-	
Harrington Industrial Plastics	-	
Hazard Management Services	-	
Hassett Hardware	-	
Helix Laboratories, Inc.	-	

WEST BAY SANITARY DISTRICT

SUMMARY OF FY2019-20 PAYMENTS
(Through Withdrawal Order
07/17/2019)

	TOTAL BY VENDOR 6/26/2019- 07/17/2019	WITHDRAWAL 7/17/2019
REGULAR PAYABLES		
Arthur Hildebrand	-	
Hillyard/San Francisco	-	
Holmes International	-	
Home Depot Credit Services	693.00	693.00
Hot Stick U.S.A.	-	
Bob Hulsmann	-	
Hydraulic Controls	-	
Hyster Sales Company	-	
ICMA-Fees	-	
IEDA	760.00	760.00
IKEA Accounts Receivable	-	
Ikon Financial Services	-	
Ikon Office Solutions	-	
Industrial Safety Supply	-	
Industrial Scientific	-	
Innovyze, Inc	-	
Institute for Local Government	-	
Instrument Technology Corp.	-	
International Tree Experts	-	
Interstate All Battery Center	-	
Interstate Traffic Control Pro	-	
Invarion Inc	-	
Isac Inc	6,581.50	6,581.50
J & B Corrosion Engineering	-	
Jack Doheny Companies, Inc.	-	
Jani-King of CA, Inc - SFR/OAK	726.60	726.60
Jonathan Werness	-	
King Kovers	-	
Bill Kitajima	-	
Kaman Industrial Technologies	-	
KDS Communications	-	
Kimball Midwest	2,310.38	2,310.38
Kelly's Stump Removal	-	
Richard Kinder	-	
KIS	-	
Kone Inc.	259.34	259.34
Alex Kushner General Contr.	-	
L & M Transmission	-	
LDH MP, LLC	-	
LMC Truck	-	
LTW Reimb Agreement Participants	-	
Larson Consulting	-	
Lasky Trade Printing	-	
Las Lomitas Elementary School	-	
Aurora Ledesma	-	
Legacy Painting Contractors	-	
Log Me In	1,666.68	1,666.68
Town of Los Altos Hills	-	
Lucity, Inc.	9,741.42	9,741.42
Lyngso Garden Materials, Inc	-	
MSDS Online, Inc.	-	
Damian Madrigal	-	
Eric Madrigal	-	
Mail Finance	-	
Mallory Co.	-	
The Marlin Company	-	
Marshall & Tidmarsh/Moulds RA	-	
Massimo Mazzon	-	
Masune	-	
Masters of Communication	-	
Matheson Tri-Gas, Inc.	45.80	45.80
Maxx Metals	-	
McGuire & Hester	-	
Dale/McMills Partnership	-	
Mckenna Long & Aldridge	-	
Medco Supply Company	148.61	148.61
Media Signage	-	

WEST BAY SANITARY DISTRICT

SUMMARY OF FY2019-20 PAYMENTS
(Through Withdrawal Order
07/17/2019)

	TOTAL BY VENDOR 6/26/2019- 07/17/2019	WITHDRAWAL 7/17/2019
REGULAR PAYABLES		
Metal Building Company	-	
Menlo Chevron	-	
Menlo Park Chamber of Commerce	-	
City of Menlo Park-Water	-	
City of Menlo Park-Repair	-	
City of Menlo Park-Fuel	4,343.24	4,343.24
City of Menlo Park	6,185.72	6,185.72
Menlo Park Police Department	-	
City of Menlo Park-Print Shop	-	
Marie Ramirez/SDU	508.62	508.62
Menlo Park Fire Protection	-	
Menlo Park Hardware Co. #14016	-	
Metromedia, Inc.	-	
Myers Tire Supply	-	
Mid Peninsula Abstracts	-	
Midwest Unlimited	-	
Mike's Camera, Inc.	-	
Mills-Peninsula Health Service	-	
Mission Clay Products LLC	731.93	731.93
Mission Valley Ford	-	
Edward P. Moritz	-	
Morse Hydraulics	-	
Moss Rubber	-	
Motion Industries, Inc.	-	
Municipal Maintenance Equip.	1,667.98	1,667.98
NCCIPMA-HR	-	
National Fleet Solutions	-	
National Notary Association	-	
Nationwide Retirement Solution	-	
National Safety Council	-	
Navia Benefit Solutions	1,163.52	1,163.52
Neopost USA Inc.	-	
Nixon-Egli Equipment Company	-	
Norcal Materials, Inc.	-	
Nor-Cal Pipeline	-	
Norlab, Inc.	-	
North Bay Pensions	-	
No. CA. Emergency Vehicle Inst	-	
Northern Safety Co.	-	
Northern Tool & Equip Co.	-	
Northwestern Design	-	
Office Of Water Programs	-	
Occasions, Etc.	-	
Ogasawara Landscape Maint.	400.00	400.00
Old Toledo Brands, Inc.	-	
Omega Industrial Supply, Inc.	-	
Onset Computer Corporation	-	
OpenGov, Inc.	-	
Oratech Controls, Inc.	-	
Orenco Systems	-	
Orlandi Trailer	-	
Orr Safety	-	
George Otte	-	
Owen Equipment Company	-	
P&F Distributers	-	
PC Connection Sales Corp	-	
Pacific Auto Repair	-	
Pacific Gas & Electric	5,129.21	5,129.21
Pacific Gas & Electric - CFM/PPC Dept	-	
PAMF	-	
Pape Machinery	-	
Patterson Medical Supply, Inc	-	
Pearpoint, Inc	-	
Peninsula Abstracts	-	
Peninsula Auto-RV Truck Service	-	
Peninsula Battery Inc.	-	
Peninsula Building Materials	-	

WEST BAY SANITARY DISTRICT

SUMMARY OF FY2019-20 PAYMENTS
(Through Withdrawal Order
07/17/2019)

	TOTAL BY VENDOR 6/26/2019- 07/17/2019	WITHDRAWAL 7/17/2019
REGULAR PAYABLES		
Peninsula Corridor JPA	-	
Pacific Peninsula Group	-	
Peterson Trucks	-	
Phil Finer Refrigeration & A/C	-	
Phil Scott	-	
Piccolo Ristorante Italiano	-	
Pier 2 Marketing	-	
Pinnacle Products	-	
Pinpoint	-	
Pipelogix	-	
Pirtek Sfo	-	
Pitney Bowes, Inc.	-	
Pollard Water.Com	-	
Ponton Industries, Inc.	-	
Precise Concrete Sawing, Inc.	-	
Precise Printing and Mailing	-	
Precision Engineering	-	
Precor Home Fitness	-	
Preferred Alliance	316.05	316.05
Principal Life Insurance Co.	4,798.74	4,798.74
Priority 1 Public Safety	-	
Profusion Ornamental Iron	-	
Progressive Business	-	
PERS Public Agency Coalition	-	
Public Employees Retirement-Medical	-	
Public Employees Retirement	-	
Sergio Ramirez	-	
R.A. Nosek Investigations	610.00	610.00
R.E.P. Nut N Bolt Guy	-	
R.S. Hughes	-	
RMC Water and Environment	-	
Radin Co.	-	
Marvin Argueta Ramos	-	
Rain Harvesting Supplies	-	
Ranger Pipelines	-	
RapidForms	-	
Readyrefresh By Nestle	267.78	267.78
Red Wing Shoe Store	-	
Redwood General Tire Co., Inc.	-	
Reed & Graham, Inc.	-	
Todd Reese	-	
Re-Pipe California	-	
Restoration Management Co.	-	
Rhino Networks	-	
Rich Voss Trucking	-	
Ricker Machinery Company	-	
Roberts & Brune Co	-	
Roto Rooter	-	
Rubber Flooring Inc.	-	
Santified Plumbing & Rooter	-	
Silicon Valley Clean Water	-	
SVCW Bond - 2009 Bond	-	
SVCW Bond - 2014 Bond	-	
SVCW Bond - 2015 Bond	-	
SVCW Bond - 2018 Bond	-	
SVCW SRF Loan payment	-	
SBWMA	-	
SWRCB	-	
Safeguard Armor	-	
Safety Center Inc	2,604.00	2,604.00
Safety-Kleen, Corp.	-	
Sage Software	-	
San Mateo County Employees	-	
San Mateo County Assessor	305.00	305.00
SM County-CSDA	-	
San Mateo County Clerk	98.00	98.00
San Mateo County Elections	-	

WEST BAY SANITARY DISTRICT

SUMMARY OF FY2019-20 PAYMENTS
(Through Withdrawal Order
07/17/2019)

	TOTAL BY VENDOR 6/26/2019- 07/17/2019	WITHDRAWAL 7/17/2019
REGULAR PAYABLES		
SM County Environmental Health	-	
SM County-Empl Services	-	
San Mateo Co Health Dept	-	
SM County Public Health	-	
San Mateo County	566.00	566.00
SM County Recorder	-	
San Mateo County Sheriffs Dept	-	
San Mateo County Tax Collector	-	
Samtrans	-	
George Sanchez III	-	
Rupert Sandoval	-	
Santa Clara Valley Water Dist.	-	
County of San Mateo LAFCO	-	
County of Santa Clara	-	
Santa Clara County Clerk - Recorder Office	-	
Santa Clara County Dept of Env. Health	-	
Santa Clara Valley - CWEA	-	
Henry Santos	-	
Scelzi Enterprises, Inc.	-	
Robert J. Scheidt	-	
Schmidt/Tabacco RA	-	
John T. Seace, LS	-	
Secretary of State	-	
Seekzen Systems	10,975.00	10,975.00
Sensera Systems	-	
Sequoia Automotive	-	
Shape Incorporated	-	
Siemens Industry, Inc.	-	
Simonds Machinery Co.	-	
Snap on Industrial C/O	-	
Sharp Business Systems	273.08	273.08
Sharp Electronics Corporation	411.33	411.33
Shaw Pipeline Inc.	-	
Signa Mechanical	-	
John R. Simonetti	-	
SIM/TECH Filter	-	
Scott Sisto	-	
Smartcover Systems, Inc.	-	
Snap on Industrial	-	
Softmart	-	
Solarwinds	-	
Sonsray Machinery Llc	-	
South Bay Truck & Equip.	-	
Southwest Credit	-	
Southwest Construction & Prop	-	
Southwest Products Corp.	-	
Spartan Tool LLC	-	
Sreco Flexible	-	
Staples Credit Plan	416.73	416.73
State Board of Equalization	-	
State Water Resources Control	-	
SWRCB - Drinking Water Ops. Cert.	-	
Statewide Safety & Signs	-	
Sterngold Reimbursement Agreement Participants	-	
Stevens Creek Quarry, Inc.	-	
Stevens Engineering	-	
Stree FX Collision & Towing	-	
Sunnyvale Ford	-	
The Surtec System	-	
Sutter EAP	418.00	418.00
Symantec Corporation	-	
System Pavers	-	
Tabacco/Schmidt Reimbursement Agreement	-	
Tap Plastics Inc.	419.65	419.65
Target Specialty Products	-	
Teamsters Local No. 350	826.00	826.00
Teletrac Navman US LTD.	-	

WEST BAY SANITARY DISTRICT

SUMMARY OF FY2019-20 PAYMENTS
(Through Withdrawal Order
07/17/2019)

	TOTAL BY VENDOR 6/26/2019- 07/17/2019		WITHDRAWAL 7/17/2019	
REGULAR PAYABLES				
Telog Instruments, Inc.	-			
Telstar Instruments, Inc.	-			
Terminix Processing Center	-			
Test America	-			
The Concept Genie	-			
Roy Thiele-Sardina	-			
Thomson Reuters/Barclays	-			
3T Equipment Company	-			
3 Day Blinds, Corp.	-			
Tools Direct USA	-			
Toshiba Financial Services	266.44		266.44	
Total Equipment	-			
Total Safety U.S., Inc.	-			
Towne Ford Sales	-			
TPC Training	-			
TPX Communications	2,281.16		2,281.16	
Tractor Equipment Sales	-			
Trailer Villa	-			
Transcom Corporation	-			
Trenchless Technology Inc.	-			
Turf & Industrial Equipment	-			
USB Memory Direct	-			
Underground Service Alert	-			
United Rentals	-			
US Bank	135.94		135.94	
U.S. BANK PARS ACCT	-			
US Concrete	-			
U.S. Healthworks Medical Group	-			
U.S. Jetting, LLC.	-			
V & A Consulting Engineers	-			
V.W. Housen & Associates	15,677.50		15,677.50	
Valley Heating & Cooling	-			
Valley Power Systems North	-			
Vanderlans & Sons, Inc.	-			
Verizon Wireless	1,669.48		1,669.48	
Vision Communications Co.	667.00		667.00	
Vortex Industries, Inc.	-			
David Walker	-			
Water Environment Federation	-			
Weco Industries, Inc.	2,244.78		2,244.78	
Donna M. Wies	-			
West Valley Ventures	-			
West Yost & Associates	10,403.18		10,403.18	
Western States Tool & Supply	-			
Whitley Burchett & Associates	-			
Winzer Corporation	-			
Woodard & Curran	2,590.35		2,590.35	
Young's Auto Supply Center	-			
Zanker Road Landfill	-			
Zoom Imaging Solutions, Inc.	384.82		384.82	
TOTAL REGULAR PAYABLES		165,621.70		165,621.70
SALARIES/WAGES & W/H				
Salaries/Wages - Net Pay	91,301.72		$91,301.72	
Directors Fees - Net Pay	2,860.00		$2,860.00	
PrimePay Fees	633,247.00		$633,247.00	
IRS - Federal Payroll Taxes	13,639.65		$13,639.65	
EDD - State Payroll Taxes	5,510.82		$5,510.82	
ICMA	8,460.03		$8,460.03	
Performance Merit Program	-			
TOTAL SALARIES RELATED		755,019.22		$755,019.22
TOTAL PAYABLES		920,640.92		920,640.92

WEST BAY SANITARY DISTRICT
Schedule of Cash Receipt Deposits
6/26/19 - 7/08/19

DEPOSIT DATE	RECEIPT NUMBER	DESCRIPTION	AMOUNT
6/28/2019	460697	Permit - 375 Walsh Rd, ATH	$250.28
6/28/2019	460698	Permit: 1645 Bay Laurel Dr, MP	$270.00
6/28/2019	460699	Permit: 953 Hobart St, MP	$270.00
6/28/2019	460700	Permit: 91 Ashfield, ATH	$480.00
6/28/2019	460701	662 Berkeley Ave., MP	$456.80
6/28/2019	460702	Permit ($270), I/I Fee ($1,275), Conn Fee ($12,750): 2025 Avy Ave, MP	$14,295.00
6/28/2019	460703	Permit: 43 Faxon Rd, ATH	$160.00
6/28/2019	460704	Permit: 6 Greenwood Pl, MP	$160.00
6/28/2019	460705	Permit: 208 Durham St, MP	$3,670.40
6/28/2019	460706	Permit: 3853 Alameda, MP	$160.00
6/28/2019	460707	Permit: 10 Sargent Ln, ATH	$270.00
6/28/2019	460708	Permit: 10 Sargent Ln, ATH	$270.00
6/28/2019	460709	Permit: 10 Sargent Ln, ATH	$270.00
6/28/2019	460710	Permit: 2198 Gordon Ave, MP	$270.00
6/28/2019	460711	Permit: 30 Cowell Ln, ATH	$160.00
6/28/2019	460712	Permit: 90 Macbain Ave, ATH	$270.00
6/28/2019	460713	Permit: 1110 Rosefield Way, MP	$160.00
6/28/2019	460714	Permit: 120 Andeta Way, PV	$405.00
6/28/2019	460715	30 Holden Court, PV Annexation and OWDZ Annexation fees	$1,090.00
6/28/2019	460716	30 Holden Court, PV - Publicaiton fee	$2,000.00
6/28/2019	460717	Invoice 2018/19-093 & Invoice 2018/19-094	$631.40
6/28/2019	460718	Permit: 1171 Valparaiso Ave, MP	$160.00
6/28/2019	460719	Discharge Permit NR-0380: 46 Linda Vista, ATH	$381.59
6/28/2019	460720	Permit: 46 Linda Vista Ave, ATH	$160.00
6/28/2019	460721	Permit: 1040 Florence Ln, MP	$270.00
6/28/2019	460722	Permit - 846, 848 and 850 Portola Road, PV	$2,545.00
7/8/2019	460723	**V O I D**	
7/8/2019	460724	Permit: 172 Elena Ave, ATH	$160.00
7/8/2019	460725	2019/20-001: FEF Pond	$351,137.91
7/8/2019	460726	Permit: 32 Kent Pl, MP	$270.00
7/8/2019	460727	Permit: 46 Marianna Ln, ATH	$270.00
7/8/2019	460728	Permit - 959 Hamilton Ct, MP. APN: 055-440-090	$330.00
7/8/2019	460729	Permit: 1230 Orange Ave, MP	$160.00
7/8/2019	460730	Permit: 1005 Almanor Ave, MP	$160.00
7/8/2019	460731	Permit: 125 Garland Dr, MP	$160.00
		Total Deposit	**$382,133.38**

WEST BAY
Sanitary District

WEST BAY SANITARY DISTRICT
AGENDA ITEM 4C

To: ***Board of Directors***

From: ***Phil Scott, District Manager***
Donald Sturman, Finance Manager

Subject: ***Consider to Ratify and Approve Report on District's Investment Portfolio Including the Transactions of Assets Described Therein as of 6/30/19***

Background

On October 27, 2010 the District named Bank of the West as the District's Investment advisor and approved to invest $5 million in available funds according to the model portfolio.

At the October 15, 2014 Board meeting the Directors discussed the District's reserve funds and directed the DM to use recent unbudgeted revenues to fund District reserves as close to the predetermined target levels as the revenues would allow. As a result, the DM transferred $3M from the Money Market account on October 29, 2014 to the Investment Management Fund.

At the November 19, 2014 Board meeting the Directors discussed the District's reserves and further directed the DM to apply another set of unbudgeted revenues to the reserves in an attempt to move even closer to the reserve target levels. In addition, since BOW had recently notified the District that the Money Market interest rate would be failing to match the LAIF (Local Agency Investment Fund) rate, the Board directed the DM to move the Operating Reserves to the Investment Management Fund. The District's Operating Fund – equivalent to 5 months operating expense – is designed to bridge the cash flow gap between tax roll receipts from the County from July to December of each year. The Board consensus was to fully fund the reserves at target levels. The Operating Reserves change each year as the budget changes and the target level was set as budgeted for the end of FY18-19. In March 2018 an additional reserve was established to set aside funds received from Sharon Heights Golf and Country Club for the required Recycled Water SRF Reserve.

The District's reserve funds were set as follows:

District Reserves	Target Balance	Mkt Value Balance
Emergency Capital Reserve	= $5.0M	$4.30M
Capital Project Reserve	= $3.5M	$2.66M
Operating Reserves (5 mo's Op Exp)	= $9.4M	$7.19M
Rate Stabilization Reserve	= $6.5M	$6.08M
Reserve maturities transferred to LAIF as of 6/30/19		$5.47M
Recycled Water Cash Flow:	= $8.0M	$8.14M
BoW RW CF Reserve		$ 223K
RW CF Reserve funds transferred to LAIF		$7.92M
Recycled Water SRF Reserve (SHGCC) = $806.2K		$ 838K

Total Reserves market value at 6/30/2019 ≈$34.19M

Analysis

The Finance Manager has attached a copy of the latest monthly Investment Management portfolio statements showing income activity and market valuations as of the end of the month for the six reserve accounts.

In June, $1,430,000 of maturing investments from the Emergency Capital, Capital Project, Operating, and Rate Stabilization Reserves were transferred to LAIF increasing the total transfer to date to $5,471,000. The purpose of this transfer is to build a source of cash liquidity for funding toward the $13M due on the 2018 SVCW Bonds payable. WBSD paid $6.6M for the 2018 SVCW Bonds on July 1, 2019. Over the next six months, the latest projection of reserve maturities provided by Bank of the West Wealth Management indicate a possible accumulation to $6.4M by November 30th. If the forecast by Bank of the West Wealth Management comes to fruition then the maturities on reserves would provide approximately $1.07M per month through November 30th. The accumulation, however, ultimately depends on the activity of the callable securities in these reserves. Possible options to fund the balance of the $6.6M include payment from general fund cash or Rate Stabilization Reserves. After the July 1 payment, future maturities in the Rate Stabilization Reserve would reimburse the funds withdrawn from the other reserves to bring them back to their target levels.

As of 6/30/2019 maturing securities in the Recycled Water Cash Flow Reserve totaling $7,918,649 have been withdrawn and deposited into LAIF. Recycled Water project spending through the end of June totaled $13,279,198 and the District has received SRF reimbursement of $10,292,110 leaving a balance of $5,471,000 of the reserves funds in LAIF as of 6/30/2019.

Fiscal Impact

The investment portfolios have been set up with the goal to yield a rate of return of approximately 2%. Based on the performance as measured by the month end market values, the yields have been trending toward this goal. The average yield in the District's LAIF account during June was 2.42%.

Recommendation

The District Manager recommends the District Board ratify and approve the report on the District's Investment Portfolio including the transactions of assets described therein as of 6/30/19.

Attachments: Investment Management Account Reports as of 6/30/2019; LAIF Performance Report for 6/30/2019.

CALIFORNIA STATE TREASURER
FIONA MA, CPA

PMIA Performance Report

Date	Daily Yield*	Quarter to Date Yield	Average Maturity (in days)
06/10/19	2.45	2.45	172
06/11/19	2.45	2.45	171
06/12/19	2.44	2.45	172
06/13/19	2.44	2.45	171
06/14/19	2.44	2.45	170
06/15/19	2.44	2.45	170
06/16/19	2.44	2.45	170
06/17/19	2.42	2.45	170
06/18/19	2.42	2.45	168
06/19/19	2.42	2.45	169
06/20/19	2.42	2.45	169
06/21/19	2.41	2.45	168
06/22/19	2.41	2.44	168
06/23/19	2.41	2.44	168
06/24/19	2.41	2.44	166
06/25/19	2.40	2.44	167
06/26/19	2.41	2.44	168
06/27/19	2.41	2.44	169
06/28/19	2.40	2.44	174
06/29/19	2.40	2.44	174
06/30/19	2.39	2.44	173
07/01/19	2.40	2.40	180
07/02/19	2.40	2.40	180
07/03/19	2.39	2.40	182
07/04/19	2.39	2.40	182
07/05/19	2.39	2.40	182
07/06/19	2.39	2.40	182
07/07/19	2.39	2.39	182
07/08/19	2.39	2.39	179
07/09/19	2.39	2.39	179
07/10/19	2.39	2.39	178

*Daily yield does not reflect capital gains or losses

View Prior Month Daily Rates

LAIF Performance Report

Quarter Ending 03/31/19

Apportionment Rate:	2.55
Earnings Ratio:	0.00006976322349099
Fair Value Factor:	1.000146954
Daily:	2.44%
Quarter to Date:	2.39%
Average Life:	179

PMIA Average Monthly Effective Yields

June 2019	2.428
May 2019	2.449
Apr 2019	2.445

Pooled Money Investment Account Portfolio Composition 06/30/19 $105.7 billion

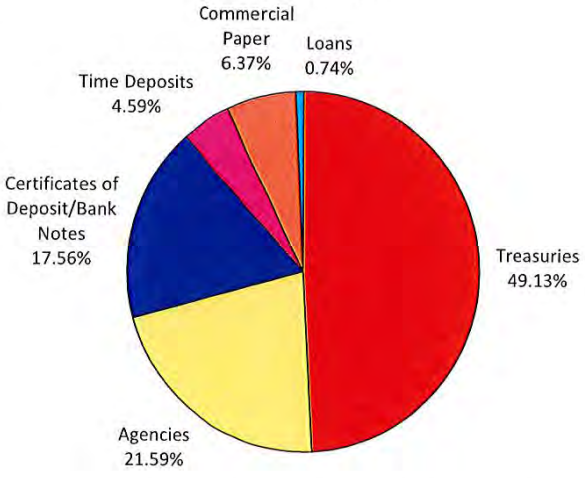

Percentages may not total 100% due to rounding

Notes: The apportionment rate includes interest earned on the CalPERS Supplemental Pension Payment pursuant to Government Code 20825 (c)(1)

Based on data available as of 07/10/2019

BANK OF THE WEST
BNP PARIBAS
WEALTH MANAGEMENT

WBSD - EMERGENCY CAPITAL RESERVE

Account Number:
Statement Period: 06/01/19 - 06/30/19

WEST BAY SANITARY DISTRICT
ATTN: PHILLIP L. SCOTT
500 LAUREL STREET
MENLO PARK CA 94025

Fiduciary
Chuen Ying Lee
(408) 645-3234
Portfolio
Michael D. Smith
(408) 490-2079

Asset Allocation

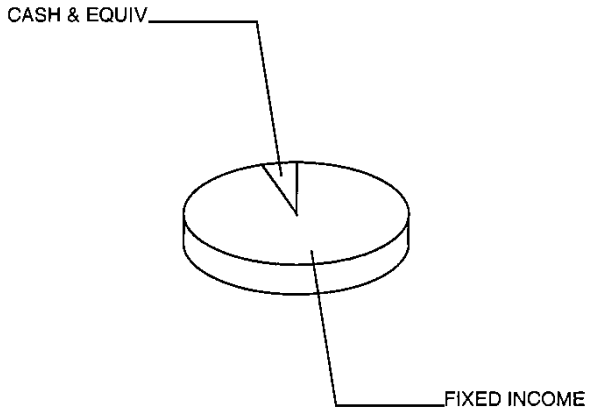

Asset Valuation

Description	Market Value	% of Account
Cash & Equiv	232,451.07	5.4%
Fixed Income	4,051,425.96	94.6%
Total Portfolio	**$ 4,283,877.03**	**100.0%**
Accrued Income	24,809.36	
Total Valuation	**$ 4,308,686.39**	

Market Reconcilement

	Current Period	Year To Date
Beginning Market Value	**$ 4,941,495.23**	**$ 5,314,621.63**
Income		
Interest	13,759.15	136,640.18
Purchased Income	0.00	-1,725.76
Disbursements	-647,781.89	-1,188,477.69
Realized Gains/(Losses)	-12,461.38	-45,063.99
Change In Accrued Income	-4,776.60	-4,350.33
Change In Market Appreciation/(Depreciation)	22,586.26	110,449.62
Non-Cash Asset Changes	-4,134.38	-13,407.27
Ending Market Value	**$ 4,308,686.39**	**$ 4,308,686.39**

BANK OF THE WEST
BNP PARIBAS
WEALTH MANAGEMENT

WBSD - EMERGENCY CAPITAL RESERVE

Account Number:
Statement Period: 06/01/19 - 06/30/19

Asset Position As of 06/30/19

Asset Description	Units	Market Value Cost	Est. Annual Income Accruals	Current Yield
Cash Equivalents				
Bank of The West Advantage Acct	232,451.070	232,451.07 232,451.07	5,299.00 206.64	2.28%
Total Cash Equivalents		**$ 232,451.07** **$ 232,451.07**	**5,299.00** **206.64**	**2.28%**
Fixed Income				
Astrazeneca PLC Sr Nt 1.95% Dtd 09/18/2012 Due 09/18/2019 Callable	100,000.000	99,905.00 98,290.00	1,950.00 557.91	1.95%
Blackrock Inc Nt 5.00% Dtd 12/10/2009 Due 12/10/2019 Callable	250,000.000	252,987.50 253,602.50	12,500.00 729.16	4.94%
Citigroup Inc Fr 2.50% Dtd 07/29/2014 Due 07/29/2019 Non-Callable	250,000.000	250,025.00 250,142.50	6,250.00 2,638.88	2.50%
Federal Home Ln Mtg Corp Partn Gold Group #G13107 5.500% Dtd 03/01/2008 Due 07/01/2020 IPD14	1,191.300	1,192.54 2,631.32	65.00 5.46	5.49%
Federal Home Ln Mtg Corp Partn Gold Group #G11940 5.500% Dtd 03/01/2006 Due 05/01/2020 IPD14	1,500.370	1,503.12 2,909.64	82.00 6.87	5.49%
Federal Home Loan Bks Cons Bds Step Cpn Dtd 04/27/2017 Due 04/27/2022 Callable	120,000.000	121,707.60 119,730.00	2,760.00 490.66	2.27%
Federal Home Loan Bks Cons Bds 3.06% Dtd 06/28/2018 Due 06/28/2022 Callable	80,000.000	80,000.00 80,000.00	2,448.00 20.40	3.06%
Federal Home Loan Bks Cons Bds 3.00% Dtd 09/27/2018 Due 09/27/2021 Callable	80,000.000	80,017.60 80,000.00	2,400.00 626.66	3.00%
Federal Home Loan Bks Cons Bds 2.00% Dtd 01/27/2016 Due 01/27/2021 Callable	75,000.000	74,982.75 73,537.10	1,500.00 641.66	2.00%
Federal Home Loan Bks Cons Bds 1.70% Dtd 07/27/2016 Due 07/27/2022 Callable	140,000.000	139,605.20 134,757.12	2,380.00 1,018.11	1.70%

BANK OF THE WEST
BNP PARIBAS
WEALTH MANAGEMENT

WBSD - EMERGENCY CAPITAL RESERVE

Account Number:
Statement Period: 06/01/19 - 06/30/19

Asset Position As of 06/30/19

Asset Description	Units	Market Value Cost	Est. Annual Income Accruals	Current Yield
Federal Farm Cr Bks Cons Systemwide Bds 1.90% Dtd 08/03/2017 Due 08/03/2022 Non-Callable	80,000.000	80,194.40 80,148.00	1,520.00 624.88	1.90%
Federal Farm Cr Bks Cons Systemwide Bds 3.17% Dtd 09/19/2018 Due 09/19/2022 Callable	80,000.000	80,188.80 80,000.00	2,536.00 718.53	3.16%
Federal Home Loan Bks Cons Bds 4.125% Dtd 11/13/2009 Due 12/13/2019 Non-Callable	50,000.000	50,443.50 50,657.50	2,062.00 103.12	4.09%
Federal Home Loan Bks Cons Bds 2.875% Dtd 08/27/2010 Due 09/11/2020 Non-Callable	80,000.000	80,892.80 81,688.80	2,300.00 702.77	2.84%
Federal Home Ln Mtg Corp 1.75% Dtd 12/30/2016 Due 12/30/2020 Callable	160,000.000	159,137.60 160,000.00	2,800.00 1,407.77	1.76%
Federal Home Ln Mtg Corp Medium Term Nts 1.625% Dtd 04/27/2017 Due 07/27/2020 Callable	40,000.000	39,877.60 40,000.00	650.00 115.55	1.63%
Federal Home Ln Mtg Corp 1.65% Dtd 04/27/2017 Due 04/27/2020 Callable	150,000.000	149,563.50 148,814.51	2,475.00 440.00	1.65%
Federal Home Ln Mtg Corp 2.00% Dtd 04/26/2017 Due 10/26/2021 Callable	120,000.000	120,010.80 120,000.00	2,400.00 433.33	2.00%
Federal Home Ln Mtg Corp 2.00% Dtd 10/12/2017 Due 10/12/2021 Callable	100,000.000	100,003.00 100,000.00	2,000.00 438.88	2.00%
Federal Home Ln Mtg Corp 1.65% Dtd 10/30/2017 Due 10/30/2019 Callable	80,000.000	79,896.80 80,000.00	1,320.00 223.66	1.65%
Federal Home Ln Mtg Corp 2.25% Dtd 12/29/2017 Due 12/29/2021 Callable	60,000.000	60,048.00 60,000.00	1,350.00 682.50	2.25%
Federal Natl Mtg Assn 1.50% Dtd 04/27/2015 Due 06/22/2020 Non-Callable	25,000.000	24,875.00 25,106.00	375.00 9.37	1.51%
Federal Natl Mtg Assn 1.50% Dtd 10/19/2015 Due 11/30/2020 Non-Callable	25,000.000	24,881.00 25,112.50	375.00 32.29	1.51%

BANK OF THE WEST
BNP PARIBAS
WEALTH MANAGEMENT

WBSD - EMERGENCY CAPITAL RESERVE

Account Number:
Statement Period: 06/01/19 - 06/30/19

Asset Position As of 06/30/19

Asset Description	Units	Market Value Cost	Est. Annual Income Accruals	Current Yield
Federal Natl Mtg Assn 1.875% Dtd 11/16/2015 Due 12/28/2020 Non-Callable	40,000.000	39,999.60 40,380.80	750.00 6.25	1.88%
Federal Natl Mtg Assn 1.375% Dtd 02/05/2016 Due 02/26/2021 Non-Callable	60,000.000	59,548.20 59,716.70	825.00 286.45	1.39%
Federal Natl Mtg Assn 1.25% Dtd 09/30/2016 Due 09/30/2019 Callable	60,000.000	59,865.60 59,985.00	750.00 189.58	1.25%
Federal Natl Mtg Assn 1.375% Dtd 10/07/2016 Due 10/07/2021 Non-Callable	60,000.000	59,416.20 59,544.52	825.00 192.50	1.39%
Federal Natl Mtg Assn 2.00% Dtd 01/09/2017 Due 01/05/2022 Non-Callable	60,000.000	60,330.00 60,212.40	1,200.00 586.66	1.99%
Federal Natl Mtg Assn 1.50% Dtd 11/27/2012 Due 11/27/2020 Callable	80,000.000	79,433.60 78,461.96	1,200.00 113.33	1.51%
Federal Natl Mtg Assn 1.80% Dtd 11/30/2016 Due 05/26/2021 Callable	100,000.000	99,502.00 100,000.00	1,800.00 175.00	1.81%
Federal Natl Mtg Assn 1.75% Dtd 09/28/2017 Due 09/28/2020 Callable	130,000.000	129,704.90 130,000.00	2,275.00 587.70	1.75%
Federal Home Ln Mtg Corp 2.375% Dtd 01/13/2012 Due 01/13/2022 Non-Callable	60,000.000	60,886.20 61,011.60	1,425.00 664.99	2.34%
Federal Home Ln Mtg Corp 1.25% Dtd 10/02/2012 Due 10/02/2019 Non-Callable	25,000.000	24,939.50 25,032.50	312.00 77.25	1.25%
Federal Home Ln Mtg Corp Multiclass Mtg Partn Ctfs Gtd Ser 2958 Cl Qj 4.00% Dtd 04/01/2005 Due 04/15/2020 IPD14	7.080	7.07 114.37	0.00 0.02	4.01%
Federal Natl Mtg Assn Gtd REMIC Passthru Tr REMIC Tr Ser 2009 M1 Cl A2 4.287% Dtd 10/01/2009 Due 07/25/2019 IPD24	69.220	69.08 100.86	2.00 0.24	4.30%

WBSD - EMERGENCY CAPITAL RESERVE

Account Number:
Statement Period: 06/01/19 - 06/30/19

Asset Position As of 06/30/19

Asset Description	Units	Market Value Cost	Est. Annual Income Accruals	Current Yield
Federal Natl Mtg Assn Gtd Passthru CTF Pool #797828 5.000% Dtd 04/01/2005 Due 04/01/2020 IPD24	8,529.540	8,727.25 11,859.01	426.00 35.53	4.89%
Federal Natl Mtg Assn Gtd Passthru CTF Pool #819257 5.000% Dtd 05/01/2005 Due 04/01/2020 IPD24	3,298.360	3,295.39 4,895.12	164.00 13.74	5.00%
Florida St Brd Admin Fin Corp Rev Bds 2016a Taxable 2.163% Dtd 03/08/2016 Due 07/01/2019 Callable	55,000.000	55,000.00 55,240.90	1,189.00 594.82	2.16%
Home Depot Inc Sr Glbl Nt 2.00% Dtd 02/12/2016 Due 04/01/2021 Callable	60,000.000	59,976.00 59,878.80	1,200.00 299.99	2.00%
Lloyds Bank PLC Sr Glbl Nt 2.35% Dtd 09/05/2014 Due 09/05/2019 Non-Callable	250,000.000	249,957.50 250,450.00	5,875.00 1,893.05	2.35%
Morgan Stanley D W Disc Srmtns Sr Nt Flt Var Rate Dtd 11/30/2010 Due 11/30/2019 Non-Callable	50,000.000	49,937.50 49,062.50	2,011.00 173.32	4.03%
Ohio St Dev Assistance GO Bds 2009b Taxable 6.52% Dtd 06/18/2009 Due 10/01/2028 Prerefunded 10/01/2019 @ 100.000 Callable	45,000.000	45,472.50 45,873.45	2,934.00 733.50	6.45%
Pfizer Inc Sr Nt 5.20% Dtd 08/12/2015 Due 08/12/2020 Non-Callable	100,000.000	103,203.00 104,770.00	5,200.00 2,007.77	5.04%
Small Business Admin Gtd Ln Pool Ctfs 7.19% Dtd 12/15/1999 Due 12/01/2019	1,050.920	1,058.37 6,907.01	75.00 96.87	7.14%
Small Business Admin Gtd Ln Pool Ctfs 7.59% Dtd 01/12/2000 Due 01/01/2020	3,129.390	3,150.20 8,477.28	237.00 118.79	7.54%
Small Business Admin Gtd Ln Pool Ctfs 4.34% Dtd 03/17/2004 Due 03/01/2024	11,222.030	11,623.89 17,690.99	487.00 193.37	4.19%
Small Business Admin Gtd Ln Pool Ctfs 5.71% Dtd 06/13/2007 Due 06/01/2027	5,328.520	5,724.48 9,164.87	304.00 25.24	5.32%

BANK OF THE WEST
BNP PARIBAS
WEALTH MANAGEMENT

WBSD - EMERGENCY CAPITAL RESERVE

Account Number:
Statement Period: 06/01/19 - 06/30/19

Asset Position As of 06/30/19

Asset Description	Units	Market Value Cost	Est. Annual Income Accruals	Current Yield
Small Business Admin Gtd Ln Pool Ctfs 4.084% Dtd 03/29/2011 Due 03/10/2021	6,928.050	7,108.32 8,273.56	282.00 119.42	3.98%
Starbucks Corp Sr Glbl 2.10% Dtd 02/04/2016 Due 02/04/2021 Callable	60,000.000	59,796.00 59,984.40	1,260.00 514.50	2.11%
3M Co Fr 2.00% Dtd 06/26/2012 Due 06/26/2022 Non-Callable	100,000.000	99,913.00 99,201.00	2,000.00 27.77	2.00%
Toronto Dominion Bank Fr 2.25% Dtd 11/05/2014 Due 11/05/2019 Non-Callable	250,000.000	249,920.00 250,940.00	5,625.00 875.00	2.25%
US Treasury Note 1.625% Dtd 03/15/2017 Due 03/15/2020	110,000.000	109,686.50 109,668.26	1,787.00 524.59	1.63%
US Treasury Note 2.75% Dtd 09/15/2018 Due 09/15/2021	100,000.000	102,235.00 99,695.31	2,750.00 807.06	2.69%
Total Fixed Income		**$ 4,051,425.96** **$ 4,073,720.66**	**99,668.00** **24,602.72**	**2.46%**
Cash				
Principal Cash		0.00 0.00	0.00	0.00%
Income Cash		0.00 0.00	0.00	0.00%
Total Cash		**$ 0.00** **$ 0.00**	**0.00** **0.00**	**0.00%**
Total Market Value		**$ 4,283,877.03** **$ 4,306,171.73**	**104,967.00** **24,809.36**	**2.45%**
Total Market Value Plus Accruals		**$ 4,308,686.39**		

Income Activity

	Date	Income Cash	Principal Cash
Interest Income			
Bank of The West Advantage Acct Int To 05/31/19	06/03/19		429.99

WBSD - EMERGENCY CAPITAL RESERVE

Account Number:
Statement Period: 06/01/19 - 06/30/19

Income Activity

	Date	Income Cash	Principal Cash
Blackrock Inc Nt 5.00% Dtd 12/10/2009 Due 12/10/2019 Callable Int To 06/10/19 on 250,000	06/10/19		6,250.00
Federal Home Ln Mtg Corp Partn Gold Group #G13107 5.500% Dtd 03/01/2008 Due 07/01/2020 IPD14 Int For May 2019 on 1584.95	06/17/19		7.26
Federal Home Ln Mtg Corp Partn Gold Group #G11940 5.500% Dtd 03/01/2006 Due 05/01/2020 IPD14 Int For May 2019 on 2135.26	06/17/19		9.79
Federal Home Loan Bks Cons Bds 3.06% Dtd 06/28/2018 Due 06/28/2022 Callable Int To 06/28/19 on 80,000	06/28/19		1,224.00
Federal Farm Cr Bks Cons Systemwide Bds 3.37% Dtd 12/05/2018 Due 12/05/2022 Callable Int 12/05/18 To 06/05/19 on 40000	06/05/19		674.00
Federal Home Loan Bks Cons Bds 4.125% Dtd 11/13/2009 Due 12/13/2019 Non-Callable Int To 06/13/19 on 50,000	06/13/19		1,031.25
Federal Home Ln Mtg Corp 3.25% Dtd 06/28/2018 Due 06/28/2023 Callable Int To 06/28/19 on 80,000	06/28/19		1,300.00
Federal Natl Mtg Assn 1.50% Dtd 04/27/2015 Due 06/22/2020 Non-Callable Int To 06/22/19 on 25,000	06/24/19		187.50
Federal Natl Mtg Assn 1.875% Dtd 11/16/2015 Due 12/28/2020 Non-Callable Int To 06/28/19 on 40,000	06/28/19		375.00
Federal Natl Mtg Assn 2.70% Dtd 03/26/2018 Due 03/26/2021 Callable Interest on Full Call of	06/26/19		945.00

WBSD - EMERGENCY CAPITAL RESERVE

Account Number:
Statement Period: 06/01/19 - 06/30/19

Income Activity

	Date	Income Cash	Principal Cash
Federal Home Ln Mtg Corp Multiclass Mtg Partn Ctfs Gtd Ser 2958 Cl Qj 4.00% Dtd 04/01/2005 Due 04/15/2020 IPD14 Int To 06/01/19 on 44.09	06/17/19		0.15
Federal Natl Mtg Assn Gtd REMIC Passthru Tr REMIC Tr Ser 2009 M1 Cl A2 4.287% Dtd 10/01/2009 Due 07/25/2019 IPD24 Int To 06/01/19 on 1774.29	06/25/19		6.34
Federal Natl Mtg Assn Gtd Passthru CTF Pool #797828 5.000% Dtd 04/01/2005 Due 04/01/2020 IPD24 Int For May 2019 on 10338.93	06/25/19		43.08
Federal Natl Mtg Assn Gtd Passthru CTF Pool #819257 5.000% Dtd 05/01/2005 Due 04/01/2020 IPD24 Int For May 2019 on 3656.59	06/25/19		15.24
Federal Natl Mtg Assn Gtd Passthru CTF Pool #MA0125 4.500% Dtd 06/01/2009 Due 07/01/2019 IPD24 Int For May 2019 on 34.54	06/25/19		0.13
Small Business Admin Gtd Ln Pool Ctfs 7.19% Dtd 12/15/1999 Due 12/01/2019 Int To 05/16/19 on 2247.52	06/03/19		80.80
Small Business Admin Gtd Ln Pool Ctfs 5.71% Dtd 06/13/2007 Due 06/01/2027 Int To 05/16/19 on 6093.34	06/03/19		173.96
Small Business Admin Gtd Ln Pool Ctfs #508468 Prime -0.175 Adj Quarterly Dtd 06/01/2008 Due 04/25/2020 Int To 05/01/19 on 1274.56	06/25/19		5.66
3M Co Fr 2.00% Dtd 06/26/2012 Due 06/26/2022 Non-Callable Int To 06/26/19 on 100,000	06/26/19		1,000.00
Total Interest Income		**$ 0.00**	**$ 13,759.15**
Total Income		**$ 0.00**	**$ 13,759.15**

WBSD - EMERGENCY CAPITAL RESERVE

Account Number:
Statement Period: 06/01/19 - 06/30/19

Disbursement Activity

	Date	Income Cash	Principal Cash
To/For Beneficiary			
West Bay Sanitary District ACH Transfer To Bank of The West Ckg#XXXXX6049 Per Verbal Instructions Dtd 5/31/19 ACH Form Dtd 12/20/17	06/04/19		-595,000.00
West Bay Sanitary District ACH Transfer To Bank of The West Ckg#XXXXX6049 Per Verbal Instructions Dtd 6/14/19 ACH Form Dtd 12/20/17	06/14/19		-52,000.00
Total To/For Beneficiary		**$ 0.00**	**$ -647,000.00**
Fees/Expenses			
Monthly Fee To 05/31/19	06/14/19		-781.89
Total Fees/Expenses		**$ 0.00**	**$ -781.89**
Total Disbursements		**$ 0.00**	**$ -647,781.89**

Purchase Activity

	Date	Income Cash	Principal Cash
Bank of The West Advantage Acct Purchases (9) 06/01/19 To 06/30/19	06/30/19		-281,967.91
Total Purchases		**$ 0.00**	**$ -281,967.91**

Sale Activity

	Date	Proceeds	Realized Gain/Loss
Bank of The West Advantage Acct Sales (3) 06/01/19 To 06/30/19	06/30/19	647,781.89	
Federal Home Ln Mtg Corp Partn Gold Group #G13107 5.500% Dtd 03/01/2008 Due 07/01/2020 IPD14 Prin Pmt For May 2019	06/17/19	393.65	-475.83
Federal Home Ln Mtg Corp Partn Gold Group #G11940 5.500% Dtd 03/01/2006 Due 05/01/2020 IPD14 Prin Pmt For May 2019	06/17/19	634.89	-596.34

WBSD - EMERGENCY CAPITAL RESERVE

Account Number:
Statement Period: **06/01/19 - 06/30/19**

Sale Activity

	Date	Proceeds	Realized Gain/Loss
Federal Farm Cr Bks Cons Systemwide Bds 3.37% Dtd 12/05/2018 Due 12/05/2022 Callable Recd Proceeds on Full Call of 40,000 Par Value	06/05/19	40,000.00	
Federal Home Ln Mtg Corp 3.25% Dtd 06/28/2018 Due 06/28/2023 Callable Recd Proceeds on Full Call of 80,000 Par Value	06/28/19	80,000.00	40.00
Federal Natl Mtg Assn 2.70% Dtd 03/26/2018 Due 03/26/2021 Callable Recd Proceeds on Full Call of 140,000 Par Value	06/26/19	140,000.00	
Federal Home Ln Mtg Corp Multiclass Mtg Partn Ctfs Gtd Ser 2958 Cl Qj 4.00% Dtd 04/01/2005 Due 04/15/2020 IPD14 Prin Pmt For 06/01/19	06/17/19	37.01	-560.84
Federal Natl Mtg Assn Gtd REMIC Passthru Tr REMIC Tr Ser 2009 M1 Cl A2 4.287% Dtd 10/01/2009 Due 07/25/2019 IPD24 Prin Pmt For 06/01/19	06/25/19	1,705.07	-779.46
Federal Natl Mtg Assn Gtd Passthru CTF Pool #797828 5.000% Dtd 04/01/2005 Due 04/01/2020 IPD24 Prin Pmt For May 2019	06/25/19	1,809.39	-706.29
Federal Natl Mtg Assn Gtd Passthru CTF Pool #819257 5.000% Dtd 05/01/2005 Due 04/01/2020 IPD24 Prin Pmt For May 2019	06/25/19	358.23	-173.42
Federal Natl Mtg Assn Gtd Passthru CTF Pool #MA0125 4.500% Dtd 06/01/2009 Due 07/01/2019 IPD24 Recd Proceeds on Final Paydown of	06/25/19	34.54	-315.38
Small Business Admin Gtd Ln Pool Ctfs 7.19% Dtd 12/15/1999 Due 12/01/2019 Prin Pmt For 05/16/19	06/03/19	1,196.60	-6,667.88

WBSD - EMERGENCY CAPITAL RESERVE

Account Number:
Statement Period: **06/01/19 - 06/30/19**

Sale Activity

	Date	Proceeds	Realized Gain/Loss
Small Business Admin Gtd Ln Pool Ctfs 5.71% Dtd 06/13/2007 Due 06/01/2027 Prin Pmt For 05/16/19	06/03/19	764.82	-550.64
Small Business Admin Gtd Ln Pool Ctfs #508468 Prime -0.175 Adj Quarterly Dtd 06/01/2008 Due 04/25/2020 Recd Proceeds on Final Paydown of 1,274.560 Par Value	06/25/19	1,274.56	-1,675.30
Total Sales		**$ 915,990.65**	**$ -12,461.38**

Non-Cash Activity

	Date	Cost
Blackrock Inc Nt 5.00% Dtd 12/10/2009 Due 12/10/2019 Callable Amortization of Premium	06/10/19	-3,567.50
Federal Home Loan Bks Cons Bds 4.125% Dtd 11/13/2009 Due 12/13/2019 Non-Callable Amortization of Premium	06/13/19	-652.50
Federal Home Ln Mtg Corp 1.65% Dtd 04/27/2017 Due 04/27/2020 Callable Accretion of Discount	06/28/19	119.74
Federal Natl Mtg Assn 1.50% Dtd 04/27/2015 Due 06/22/2020 Non-Callable Amortization of Premium	06/21/19	-52.75
Federal Natl Mtg Assn 1.875% Dtd 11/16/2015 Due 12/28/2020 Non-Callable Amortization of Premium	06/28/19	-125.60
Federal Natl Mtg Assn 1.375% Dtd 02/05/2016 Due 02/26/2021 Non-Callable Accretion of Discount	06/28/19	14.25

BANK OF THE WEST
BNP PARIBAS
WEALTH MANAGEMENT

WBSD - EMERGENCY CAPITAL RESERVE

Account Number:
Statement Period: 06/01/19 - 06/30/19

Non-Cash Activity

	Date	Cost
Federal Natl Mtg Assn 1.375% Dtd 10/07/2016 Due 10/07/2021 Non-Callable Accretion of Discount	06/28/19	16.71
Federal Natl Mtg Assn 1.50% Dtd 11/27/2012 Due 11/27/2020 Callable Accretion of Discount	06/28/19	91.00
3M Co Fr 2.00% Dtd 06/26/2012 Due 06/26/2022 Non-Callable Accretion of Discount	06/28/19	22.27
Total Non-Cash Transactions		**$ -4,134.38**

SECURITY PRICES CONTAINED IN THIS STATEMENT ARE OBTAINED FROM THE MOST RELIABLE SOURCES AVAILABLE BUT ARE NOT GUARANTEED BY BANK OF THE WEST. QUOTED PRICES MAY NOT EQUAL ACTUAL PRICES BECAUSE OF SECURITY SIZE, MARKET PRICE, TERM AND DEMAND.

BANK OF THE WEST
BNP PARIBAS
WEALTH MANAGEMENT

WBSD - CAPITAL PROJECT RESERVE

Account Number:
Statement Period: 06/01/19 - 06/30/19

WEST BAY SANITARY DISTRICT
ATTN: PHILLIP L. SCOTT
500 LAUREL STREET
MENLO PARK CA 94025

Fiduciary
Chuen Ying Lee
(408) 645-3234
Portfolio
Michael D. Smith
(408) 490-2079

Asset Allocation

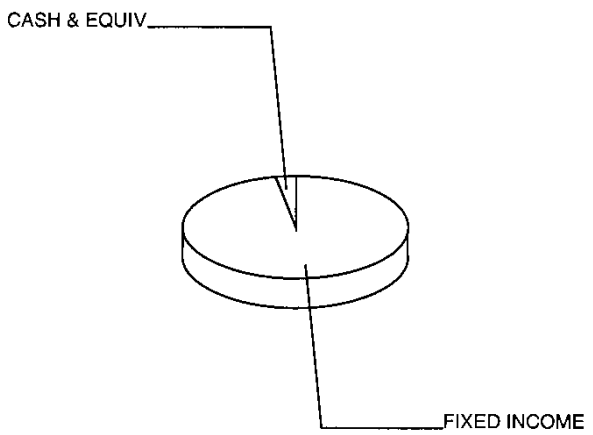

Asset Valuation

Description	Market Value	% of Account
Cash & Equiv	74,310.82	2.8%
Fixed Income	2,576,704.08	97.2%
Total Portfolio	**$ 2,651,014.90**	**100.0%**
Accrued Income	15,734.34	
Total Valuation	**$ 2,666,749.24**	

Market Reconcilement

	Current Period	Year To Date
Beginning Market Value	**$ 2,812,952.19**	**$ 3,638,450.30**
Income		
Interest	8,566.26	88,966.14
Purchased Income	0.00	-1,232.58
Disbursements	-155,444.76	-1,096,688.13
Realized Gains/(Losses)	-311.15	-25,397.34
Change In Accrued Income	-3,199.28	-3,177.63
Change In Market Appreciation/(Depreciation)	6,837.10	79,734.14
Non-Cash Asset Changes	-2,651.12	-13,905.66
Ending Market Value	**$ 2,666,749.24**	**$ 2,666,749.24**

BANK OF THE WEST
BNP PARIBAS
WEALTH MANAGEMENT

WBSD - CAPITAL PROJECT RESERVE

Account Number:
Statement Period: 06/01/19 - 06/30/19

Asset Position As of 06/30/19

Asset Description	Units	Market Value Cost	Est. Annual Income Accruals	Current Yield
Cash Equivalents				
Bank of The West Advantage Acct	74,310.820	74,310.82 74,310.82	1,694.00 70.44	2.28%
Total Cash Equivalents		**$ 74,310.82** **$ 74,310.82**	**1,694.00** **70.44**	**2.28%**
Fixed Income				
Federal Home Loan Bks Cons Bds Step Cpn Dtd 04/27/2017 Due 04/27/2022 Callable	50,000.000	50,711.50 49,887.50	1,150.00 204.44	2.27%
Federal Home Loan Bks Cons Bds 2.28% Dtd 10/26/2017 Due 10/26/2022 Callable	80,000.000	79,888.00 79,680.00	1,824.00 329.33	2.28%
Federal Home Loan Bks Cons Bds 3.06% Dtd 06/28/2018 Due 06/28/2022 Callable	100,000.000	100,000.00 100,000.00	3,060.00 25.50	3.06%
Federal Home Loan Bks Cons Bds 2.375% Dtd 12/30/2013 Due 12/13/2019 Non-Callable	50,000.000	50,032.50 50,310.50	1,187.00 59.37	2.37%
Federal Home Loan Bks Cons Bds 1.625% Dtd 09/30/2016 Due 09/30/2021 Callable	100,000.000	99,538.00 97,096.30	1,625.00 410.76	1.63%
Federal Farm Cr Bks Cons Systemwide Bds 2.10% Dtd 10/04/2017 Due 04/04/2022 Callable	110,000.000	110,001.10 110,000.00	2,310.00 558.25	2.10%
Federal Farm Cr Bks Cons Systemwide Bds 2.03% Dtd 04/19/2017 Due 07/19/2021 Callable	60,000.000	60,000.60 60,000.00	1,218.00 548.09	2.03%
Federal Farm Cr Bks Cons Systemwide Bds 1.90% Dtd 07/19/2017 Due 07/19/2022 Non-Callable	60,000.000	60,150.60 60,202.20	1,140.00 513.00	1.90%
Federal Farm Cr Bks Cons Systemwide Bds 1.90% Dtd 08/03/2017 Due 08/03/2022 Non-Callable	60,000.000	60,145.80 60,111.00	1,140.00 468.66	1.90%
Federal Farm Cr Bks Cons Systemwide Bds 3.17% Dtd 09/19/2018 Due 09/19/2022 Callable	80,000.000	80,188.80 80,000.00	2,536.00 718.53	3.16%

BANK OF THE WEST
BNP PARIBAS
WEALTH MANAGEMENT

WBSD - CAPITAL PROJECT RESERVE

Account Number:
Statement Period: 06/01/19 - 06/30/19

Asset Position As of 06/30/19

Asset Description	Units	Market Value Cost	Est. Annual Income Accruals	Current Yield
Federal Home Loan Bks Cons Bds 4.625% Dtd 05/25/2005 Due 06/12/2020 Non-Callable	50,000.000	51,200.50 51,517.50	2,312.00 122.04	4.52%
Federal Home Loan Bks Cons Bds 4.50% Dtd 08/12/2009 Due 09/13/2019 Non-Callable	100,000.000	100,447.00 101,660.00	4,500.00 1,350.00	4.48%
Federal Home Loan Bks Cons Bds 4.125% Dtd 11/13/2009 Due 12/13/2019 Non-Callable	100,000.000	100,887.00 101,315.00	4,125.00 206.24	4.09%
Federal Farm Cr Bks Cons Systemwide Bds 4.75% Dtd 09/21/2005 Due 09/21/2020 Non-Callable	125,000.000	129,220.00 131,215.00	5,937.00 1,649.30	4.59%
Federal Home Loan Bks Cons Bds 2.875% Dtd 08/27/2010 Due 09/11/2020 Non-Callable	100,000.000	101,116.00 102,111.00	2,875.00 878.47	2.84%
Federal Home Ln Mtg Corp 1.50% Dtd 09/30/2016 Due 03/30/2021 Callable	50,000.000	49,688.00 50,000.00	750.00 189.58	1.51%
Federal Home Ln Mtg Corp 1.75% Dtd 12/30/2016 Due 12/30/2020 Callable	180,000.000	179,029.80 180,000.00	3,150.00 1,583.75	1.76%
Federal Home Ln Mtg Corp 2.10% Dtd 09/29/2017 Due 09/29/2022 Callable	50,000.000	50,031.50 49,875.00	1,050.00 268.33	2.10%
Federal Home Ln Mtg Corp 1.65% Dtd 04/27/2017 Due 04/27/2020 Callable	100,000.000	99,709.00 99,209.60	1,650.00 293.33	1.65%
Federal Home Ln Mtg Corp 2.25% Dtd 12/29/2017 Due 12/29/2021 Callable	80,000.000	80,064.00 80,000.00	1,800.00 910.00	2.25%
Federal Natl Mtg Assn 1.50% Dtd 04/27/2015 Due 06/22/2020 Non-Callable	40,000.000	39,800.00 40,169.60	600.00 15.00	1.51%
Federal Natl Mtg Assn 1.50% Dtd 10/19/2015 Due 11/30/2020 Non-Callable	40,000.000	39,809.60 40,180.00	600.00 51.66	1.51%
Federal Natl Mtg Assn 1.875% Dtd 11/16/2015 Due 12/28/2020 Non-Callable	100,000.000	99,999.00 100,952.00	1,875.00 15.62	1.88%

BANK OF THE WEST
BNP PARIBAS
WEALTH MANAGEMENT

WBSD - CAPITAL PROJECT RESERVE

Account Number:
Statement Period: 06/01/19 - 06/30/19

Asset Position As of 06/30/19

Asset Description	Units	Market Value Cost	Est. Annual Income Accruals	Current Yield
Federal Natl Mtg Assn 1.375% Dtd 02/05/2016 Due 02/26/2021 Non-Callable	60,000.000	59,548.20 59,716.70	825.00 286.45	1.39%
Federal Natl Mtg Assn 1.375% Dtd 10/07/2016 Due 10/07/2021 Non-Callable	60,000.000	59,416.20 59,544.52	825.00 192.50	1.39%
Federal Natl Mtg Assn 2.00% Dtd 01/09/2017 Due 01/05/2022 Non-Callable	120,000.000	120,660.00 120,424.80	2,400.00 1,173.33	1.99%
Federal Natl Mtg Assn 1.875% Dtd 04/10/2017 Due 04/05/2022 Non-Callable	60,000.000	60,123.60 60,151.80	1,125.00 268.75	1.87%
Federal Natl Mtg Assn 1.55% Dtd 08/28/2012 Due 08/28/2019 Callable	100,000.000	99,890.00 100,190.00	1,550.00 529.58	1.55%
Federal Natl Mtg Assn 1.80% Dtd 11/30/2016 Due 05/26/2021 Callable	120,000.000	119,402.40 120,000.00	2,160.00 210.00	1.81%
Federal Home Ln Mtg Corp 2.375% Dtd 01/13/2012 Due 01/13/2022 Non-Callable	120,000.000	121,772.40 122,023.20	2,850.00 1,330.00	2.34%
Federal Natl Mtg Assn Gtd REMIC Passthru Tr REMIC Tr Ser 2009 M1 Cl A2 4.287% Dtd 10/01/2009 Due 07/25/2019 IPD24	40.440	40.36 43.32	1.00 0.14	4.30%
Federal Natl Mtg Assn Gtd Passthru CTF Pool #797828 5.000% Dtd 04/01/2005 Due 04/01/2020 IPD24	4,264.760	4,363.62 4,501.99	213.00 17.76	4.89%
US Treasury Note 1.625% Dtd 03/15/2017 Due 03/15/2020	60,000.000	59,829.00 59,850.61	975.00 286.14	1.63%
Total Fixed Income		**$ 2,576,704.08** **$ 2,581,939.14**	**61,338.00** **15,663.90**	**2.38%**
Cash				
Principal Cash		0.00 0.00	0.00	0.00%
Income Cash		0.00 0.00	0.00	0.00%

BANK OF THE WEST
BNP PARIBAS
WEALTH MANAGEMENT

WBSD - CAPITAL PROJECT RESERVE

Account Number:
Statement Period: 06/01/19 - 06/30/19

Asset Position As of 06/30/19

Asset Description	Units	Market Value Cost	Est. Annual Income Accruals	Current Yield
Total Cash		$ 0.00 $ 0.00	0.00 0.00	0.00%
Total Market Value		$ 2,651,014.90 $ 2,656,249.96	63,032.00 15,734.34	2.38%
Total Market Value Plus Accruals		$ 2,666,749.24		

Income Activity

	Date	Income Cash	Principal Cash
Interest Income			
Bank of The West Advantage Acct Int To 05/31/19	06/03/19		120.90
Federal Home Loan Bks Cons Bds 3.06% Dtd 06/28/2018 Due 06/28/2022 Callable Int To 06/28/19 on 100,000	06/28/19		1,530.00
Federal Home Loan Bks Cons Bds 2.375% Dtd 12/30/2013 Due 12/13/2019 Non-Callable Int To 06/13/19 on 50,000	06/13/19		593.75
Federal Farm Cr Bks Cons Systemwide Bds 3.37% Dtd 12/05/2018 Due 12/05/2022 Callable Int 12/05/18 To 06/05/19 on 50000	06/05/19		842.50
Federal Home Loan Bks Cons Bds 4.625% Dtd 05/25/2005 Due 06/12/2020 Non-Callable Int To 06/12/19 on 50,000	06/12/19		1,156.25
Federal Home Loan Bks Cons Bds 4.125% Dtd 11/13/2009 Due 12/13/2019 Non-Callable Int To 06/13/19 on 100,000	06/13/19		2,062.50
Federal Home Ln Mtg Corp 3.25% Dtd 06/28/2018 Due 06/28/2023 Callable Int To 06/28/19 on 60,000	06/28/19		975.00

WBSD - CAPITAL PROJECT RESERVE

Account Number:
Statement Period: 06/01/19 - 06/30/19

Income Activity

	Date	Income Cash	Principal Cash
Federal Natl Mtg Assn 1.50% Dtd 04/27/2015 Due 06/22/2020 Non-Callable Int To 06/22/19 on 40,000	06/24/19		300.00
Federal Natl Mtg Assn 1.875% Dtd 11/16/2015 Due 12/28/2020 Non-Callable Int To 06/28/19 on 100,000	06/28/19		937.50
Federal Natl Mtg Assn Gtd REMIC Passthru Tr REMIC Tr Ser 2009 M1 Cl A2 4.287% Dtd 10/01/2009 Due 07/25/2019 IPD24 Int To 06/01/19 on 1036.44	06/25/19		3.70
Federal Natl Mtg Assn Gtd Passthru CTF Pool #797828 5.000% Dtd 04/01/2005 Due 04/01/2020 IPD24 Int For May 2019 on 5169.46	06/25/19		21.54
Small Business Admin Gtd Ln Pool Ctfs #508468 Prime -0.175 Adj Quarterly Dtd 06/01/2008 Due 04/25/2020 Int To 05/01/19 on 5098.25	06/25/19		22.62
Total Interest Income		**$ 0.00**	**$ 8,566.26**
Total Income		**$ 0.00**	**$ 8,566.26**

Disbursement Activity

	Date	Income Cash	Principal Cash
To/For Beneficiary			
West Bay Sanitary District ACH Transfer To Bank of The West Ckg#XXXXX6049 Per Verbal Instructions Dtd 5/31/19 ACH Form Dtd 12/20/17	06/04/19		-100,000.00
West Bay Sanitary District ACH Transfer To Bank of The West Ckg#XXXXX6049 Per Verbal Instructions Dtd 6/14/19 ACH Form Dtd 12/20/17	06/14/19		-55,000.00
Total To/For Beneficiary		**$ 0.00**	**$ -155,000.00**

WBSD - CAPITAL PROJECT RESERVE

Account Number:
Statement Period: 06/01/19 - 06/30/19

Disbursement Activity

	Date	Income Cash	Principal Cash
Fees/Expenses			
Monthly Fee To 05/31/19	06/14/19		-444.76
Total Fees/Expenses		**$ 0.00**	**$ -444.76**
Total Disbursements		**$ 0.00**	**$ -155,444.76**

Purchase Activity

	Date	Income Cash	Principal Cash
Bank of The West Advantage Acct Purchases (7) 06/01/19 To 06/30/19	06/30/19		-125,565.21
Total Purchases		**$ 0.00**	**$ -125,565.21**

Sale Activity

	Date	Proceeds	Realized Gain/Loss
Bank of The West Advantage Acct Sales (3) 06/01/19 To 06/30/19	06/30/19	155,444.76	
Federal Farm Cr Bks Cons Systemwide Bds 3.37% Dtd 12/05/2018 Due 12/05/2022 Callable Recd Proceeds on Full Call of 50,000 Par Value	06/05/19	50,000.00	
Federal Home Ln Mtg Corp 3.25% Dtd 06/28/2018 Due 06/28/2023 Callable Recd Proceeds on Full Call of 60,000 Par Value	06/28/19	60,000.00	30.00
Federal Natl Mtg Assn Gtd REMIC Passthru Tr REMIC Tr Ser 2009 M1 Cl A2 4.287% Dtd 10/01/2009 Due 07/25/2019 IPD24 Prin Pmt For 06/01/19	06/25/19	996.00	-70.97
Federal Natl Mtg Assn Gtd Passthru CTF Pool #797828 5.000% Dtd 04/01/2005 Due 04/01/2020 IPD24 Prin Pmt For May 2019	06/25/19	904.70	-50.32

WBSD - CAPITAL PROJECT RESERVE

Account Number:
Statement Period: 06/01/19 - 06/30/19

Sale Activity

	Date	Proceeds	Realized Gain/Loss
Small Business Admin Gtd Ln Pool Ctfs #508468 Prime -0.175 Adj Quarterly Dtd 06/01/2008 Due 04/25/2020 Recd Proceeds on Final Paydown of 5,098.250 Par Value	06/25/19	5,098.25	-219.86
Total Sales		**$ 272,443.71**	**$ -311.15**

Non-Cash Activity

	Date	Cost
Federal Home Loan Bks Cons Bds 2.375% Dtd 12/30/2013 Due 12/13/2019 Non-Callable Amortization of Premium	06/13/19	-308.50
Federal Home Loan Bks Cons Bds 4.625% Dtd 05/25/2005 Due 06/12/2020 Non-Callable Amortization of Premium	06/12/19	-750.00
Federal Home Loan Bks Cons Bds 4.125% Dtd 11/13/2009 Due 12/13/2019 Non-Callable Amortization of Premium	06/13/19	-1,305.00
Federal Home Ln Mtg Corp 1.65% Dtd 04/27/2017 Due 04/27/2020 Callable Accretion of Discount	06/28/19	79.82
Federal Natl Mtg Assn 1.50% Dtd 04/27/2015 Due 06/22/2020 Non-Callable Amortization of Premium	06/21/19	-84.40
Federal Natl Mtg Assn 1.875% Dtd 11/16/2015 Due 12/28/2020 Non-Callable Amortization of Premium	06/28/19	-314.00
Federal Natl Mtg Assn 1.375% Dtd 02/05/2016 Due 02/26/2021 Non-Callable Accretion of Discount	06/28/19	14.25

BANK OF THE WEST
BNP PARIBAS
WEALTH MANAGEMENT

WBSD - CAPITAL PROJECT RESERVE

Account Number:
Statement Period: 06/01/19 - 06/30/19

Non-Cash Activity

	Date	Cost
Federal Natl Mtg Assn 1.375% Dtd 10/07/2016 Due 10/07/2021 Non-Callable Accretion of Discount	06/28/19	16.71
Total Non-Cash Transactions		**$ -2,651.12**

SECURITY PRICES CONTAINED IN THIS STATEMENT ARE OBTAINED FROM THE MOST RELIABLE SOURCES AVAILABLE BUT ARE NOT GUARANTEED BY BANK OF THE WEST. QUOTED PRICES MAY NOT EQUAL ACTUAL PRICES BECAUSE OF SECURITY SIZE, MARKET PRICE, TERM AND DEMAND.

BANK OF THE WEST
BNP PARIBAS
WEALTH MANAGEMENT

WBSD - OPERATING RESERVE

Account Number:
Statement Period: **06/01/19 - 06/30/19**

WEST BAY SANITARY DISTRICT
ATTN: PHILLIP L. SCOTT
500 LAUREL STREET
MENLO PARK CA 94025

Fiduciary
Chuen Ying Lee
(408) 645-3234
Portfolio
Michael D. Smith
(408) 490-2079

Asset Allocation

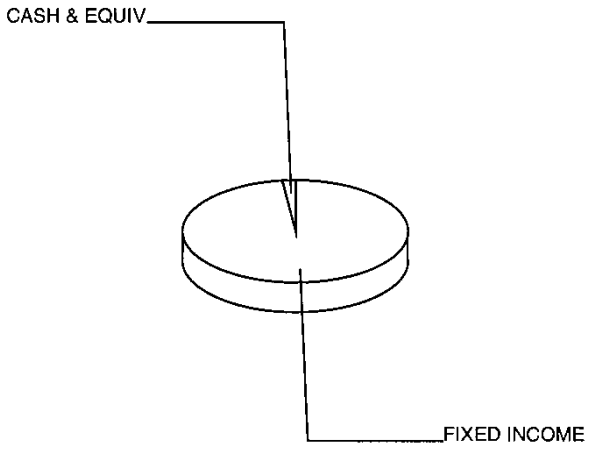

Asset Valuation

Description	Market Value	% of Account
Cash & Equiv	136,897.70	1.9%
Fixed Income	7,016,755.92	98.1%
Total Portfolio	**$ 7,153,653.62**	**100.0%**
Accrued Income	38,022.85	
Total Valuation	**$ 7,191,676.47**	

Market Reconcilement

	Current Period	Year To Date
Beginning Market Value	**$ 7,502,288.94**	**$ 7,931,098.40**
Income		
Interest	17,622.65	219,017.13
Purchased Income	0.00	-7,556.45
Additions	0.00	1,435,000.00
Disbursements	-338,187.58	-2,503,185.17
Realized Gains/(Losses)	-277.01	-41,322.41
Change In Accrued Income	-3,723.56	-4,037.20
Change In Market Appreciation/(Depreciation)	19,508.21	190,262.56
Non-Cash Asset Changes	-5,555.18	-27,600.39
Ending Market Value	**$ 7,191,676.47**	**$ 7,191,676.47**

BANK OF THE WEST
BNP PARIBAS
WEALTH MANAGEMENT

WBSD - OPERATING RESERVE

Account Number:
Statement Period: 06/01/19 - 06/30/19

Asset Position As of 06/30/19

Asset Description	Units	Market Value Cost	Est. Annual Income Accruals	Current Yield
Cash Equivalents				
Bank of The West Advantage Acct	136,897.700	136,897.70 136,897.70	3,121.00 244.06	2.28%
Total Cash Equivalents		**$ 136,897.70** **$ 136,897.70**	**3,121.00** **244.06**	**2.28%**
Fixed Income				
Alibaba Group Hldg LTD Sr 144a 2.50% Dtd 11/28/2014 Due 11/28/2019 Callable	200,000.000	200,092.00 198,364.00	5,000.00 458.33	2.50%
Atlantic Richfield Co Deb 8.25% Dtd 02/01/1992 Due 02/01/2022 Non-Callable	15,000.000	16,938.30 17,421.15	1,237.00 515.62	7.31%
Capital One Bk USA Natl Assn CTF Dep 1.40% Dtd 09/28/2016 Due 09/28/2020 Non-Callable	100,000.000	98,864.00 100,000.00	1,400.00 364.38	1.42%
Constellation Brands Inc Sr Glbl Nt 2.25% Dtd 11/07/2017 Due 11/06/2020 Callable	75,000.000	74,839.50 74,824.50	1,687.00 257.81	2.25%
Federal Home Ln Mtg Corp Partn Gold Group #G13107 5.500% Dtd 03/01/2008 Due 07/01/2020 IPD14	1,185.970	1,187.20 1,246.01	65.00 5.43	5.49%
Federal Home Ln Mtg Corp Partn Gold Group #G11940 5.500% Dtd 03/01/2006 Due 05/01/2020 IPD14	1,534.400	1,537.21 1,618.80	84.00 7.03	5.49%
Federal Home Loan Bks Cons Bds 1.875% Dtd 11/30/2016 Due 11/29/2021 Non-Callable	200,000.000	200,470.00 198,049.67	3,750.00 333.33	1.87%
Federal Home Loan Bks Cons Bds 2.28% Dtd 10/26/2017 Due 10/26/2022 Callable	80,000.000	79,888.00 79,680.00	1,824.00 329.33	2.28%
Federal Home Loan Bks Cons Bds 2.00% Dtd 10/30/2017 Due 04/30/2021 Callable	100,000.000	100,006.00 97,788.51	2,000.00 338.88	2.00%
Federal Home Loan Bks Cons Bds 3.00% Dtd 09/27/2018 Due 09/27/2021 Callable	40,000.000	40,008.80 40,000.00	1,200.00 313.33	3.00%

BANK OF THE WEST
BNP PARIBAS
WEALTH MANAGEMENT

WBSD - OPERATING RESERVE

Account Number:
Statement Period: 06/01/19 - 06/30/19

Asset Position As of 06/30/19

Asset Description	Units	Market Value Cost	Est. Annual Income Accruals	Current Yield
Federal Farm Cr Bks Cons Systemwide Bds 2.10% Dtd 10/04/2017 Due 04/04/2022 Callable	140,000.000	140,001.40 140,000.00	2,940.00 710.50	2.10%
Federal Farm Cr Bks Cons Systemwide Bds 2.03% Dtd 04/19/2017 Due 07/19/2021 Callable	40,000.000	40,000.40 40,000.00	812.00 365.40	2.03%
Federal Farm Cr Bks Cons Systemwide Bds 1.97% Dtd 05/17/2017 Due 05/17/2021 Callable	120,000.000	120,001.20 118,670.46	2,364.00 288.93	1.97%
Federal Farm Cr Bks Cons Systemwide Bds 1.62% Dtd 09/11/2017 Due 09/11/2020 Callable	180,000.000	179,542.80 178,429.60	2,916.00 891.00	1.62%
Federal Farm Cr Bks Cons Systemwide Bds 3.17% Dtd 09/19/2018 Due 09/19/2022 Callable	50,000.000	50,118.00 50,000.00	1,585.00 449.08	3.16%
Federal Home Loan Bks Cons Bds 4.625% Dtd 05/25/2005 Due 06/12/2020 Non-Callable	200,000.000	204,802.00 206,070.00	9,250.00 488.19	4.52%
Federal Home Loan Bks Cons Bds 4.50% Dtd 08/12/2009 Due 09/13/2019 Non-Callable	200,000.000	200,894.00 203,130.00	9,000.00 2,700.00	4.48%
Federal Home Loan Bks Cons Bds 4.125% Dtd 11/13/2009 Due 12/13/2019 Non-Callable	200,000.000	201,774.00 202,630.00	8,250.00 412.50	4.09%
Federal Farm Cr Bks Cons Systemwide Bds 5.32% Dtd 10/03/2007 Due 09/03/2019 Non-Callable	50,000.000	50,287.50 50,931.50	2,660.00 871.88	5.29%
Federal Home Loan Bks Cons Bds 2.875% Dtd 08/27/2010 Due 09/11/2020 Non-Callable	60,000.000	60,669.60 61,266.60	1,725.00 527.08	2.84%
Federal Home Loan Bks Cons Bds 1.75% Dtd 06/03/2013 Due 06/12/2020 Non-Callable	60,000.000	59,854.80 60,139.80	1,050.00 55.41	1.75%
Federal Home Loan Bks Cons Bds 2.00% Dtd 08/12/2013 Due 09/13/2019 Non-Callable	60,000.000	59,968.20 60,249.60	1,200.00 359.99	2.00%
Federal Home Ln Mtg Corp Step Cpn Dtd 09/30/2016 Due 09/30/2021 Callable	200,000.000	199,188.00 199,800.00	2,500.00 631.94	1.26%

BANK OF THE WEST
BNP PARIBAS
WEALTH MANAGEMENT

WBSD - OPERATING RESERVE

Account Number:
Statement Period: 06/01/19 - 06/30/19

Asset Position As of 06/30/19

Asset Description	Units	Market Value Cost	Est. Annual Income Accruals	Current Yield
Federal Home Ln Mtg Corp 1.50% Dtd 12/30/2016 Due 12/30/2019 Callable	120,000.000	119,552.40 120,000.00	1,800.00 905.00	1.51%
Federal Home Ln Mtg Corp 1.75% Dtd 12/30/2016 Due 12/30/2020 Callable	120,000.000	119,353.20 120,000.00	2,100.00 1,055.83	1.76%
Federal Home Ln Mtg Corp Medium Term Nts 1.625% Dtd 04/27/2017 Due 07/27/2020 Callable	40,000.000	39,877.60 40,000.00	650.00 115.55	1.63%
Federal Home Ln Mtg Corp 1.60% Dtd 05/15/2017 Due 05/15/2020 Callable	240,000.000	239,352.00 240,000.00	3,840.00 490.66	1.60%
Federal Home Ln Mtg Corp 2.00% Dtd 04/26/2017 Due 10/26/2021 Callable	240,000.000	240,021.60 240,000.00	4,800.00 866.66	2.00%
Federal Home Ln Mtg Corp 2.00% Dtd 10/12/2017 Due 10/12/2021 Callable	120,000.000	120,003.60 120,000.00	2,400.00 526.66	2.00%
Federal Home Ln Mtg Corp 2.25% Dtd 12/29/2017 Due 12/29/2021 Callable	120,000.000	120,096.00 120,000.00	2,700.00 1,365.00	2.25%
Federal Natl Mtg Assn 1.50% Dtd 10/19/2015 Due 11/30/2020 Non-Callable	50,000.000	49,762.00 49,693.50	750.00 64.58	1.51%
Federal Natl Mtg Assn 1.875% Dtd 11/16/2015 Due 12/28/2020 Non-Callable	60,000.000	59,999.40 60,571.20	1,125.00 9.37	1.88%
Federal Natl Mtg Assn 1.375% Dtd 02/05/2016 Due 02/26/2021 Non-Callable	90,000.000	89,322.30 89,575.17	1,237.00 429.68	1.39%
Federal Natl Mtg Assn 1.25% Dtd 05/16/2016 Due 05/06/2021 Non-Callable	160,000.000	158,385.60 159,037.57	2,000.00 305.55	1.26%
Federal Natl Mtg Assn 1.25% Dtd 09/30/2016 Due 09/30/2019 Callable	400,000.000	399,104.00 399,900.00	5,000.00 1,263.88	1.25%
Federal Natl Mtg Assn 1.375% Dtd 10/07/2016 Due 10/07/2021 Non-Callable	90,000.000	89,124.30 89,316.89	1,237.00 288.75	1.39%

BANK OF THE WEST
BNP PARIBAS
WEALTH MANAGEMENT

WBSD - OPERATING RESERVE

Account Number:
Statement Period: 06/01/19 - 06/30/19

Asset Position As of 06/30/19

Asset Description	Units	Market Value Cost	Est. Annual Income Accruals	Current Yield
Federal Natl Mtg Assn 2.00% Dtd 01/09/2017 Due 01/05/2022 Non-Callable	270,000.000	271,485.00 268,958.84	5,400.00 2,640.00	1.99%
Federal Natl Mtg Assn 1.875% Dtd 04/10/2017 Due 04/05/2022 Non-Callable	160,000.000	160,329.60 161,067.20	3,000.00 716.66	1.87%
Federal Natl Mtg Assn 1.80% Dtd 11/30/2016 Due 05/26/2021 Callable	60,000.000	59,701.20 60,000.00	1,080.00 105.00	1.81%
Federal Home Ln Mtg Corp 2.375% Dtd 01/13/2012 Due 01/13/2022 Non-Callable	90,000.000	91,329.30 91,517.40	2,137.00 997.50	2.34%
Federal Home Ln Mtg Corp 1.25% Dtd 10/02/2012 Due 10/02/2019 Non-Callable	40,000.000	39,903.20 40,052.00	500.00 123.61	1.25%
Federal Home Ln Mtg Corp 1.375% Dtd 04/04/2013 Due 05/01/2020 Non-Callable	50,000.000	49,714.50 49,902.04	687.00 114.58	1.38%
Federal Natl Mtg Assn Gtd REMIC Passthru Tr REMIC Tr Ser 2009 M1 Cl A2 4.287% Dtd 10/01/2009 Due 07/25/2019 IPD24	69.220	69.08 74.15	2.00 0.24	4.30%
Federal Natl Mtg Assn Gtd Passthru CTF Pool #797828 5.000% Dtd 04/01/2005 Due 04/01/2020 IPD24	9,112.210	9,323.43 9,619.08	455.00 37.96	4.89%
Florida St Brd Admin Fin Corp Rev Bds 2016a Taxable 2.163% Dtd 03/08/2016 Due 07/01/2019 Callable	55,000.000	55,000.00 55,240.90	1,189.00 594.82	2.16%
GE Capital Internotes Fr 5.50% Dtd 11/05/2009 Due 11/15/2021 Non-Callable	50,000.000	52,637.00 53,768.00	2,750.00 351.38	5.22%
Home Depot Inc Sr Glbl Nt 2.00% Dtd 02/12/2016 Due 04/01/2021 Callable	50,000.000	49,980.00 49,899.00	1,000.00 250.00	2.00%
Keybank National Association Regs Bd 2.50% Dtd 11/24/2014 Due 12/15/2019 Non-Callable	250,000.000	250,045.00 250,245.00	6,250.00 277.77	2.50%

BANK OF THE WEST
BNP PARIBAS
WEALTH MANAGEMENT

WBSD - OPERATING RESERVE

Account Number:
Statement Period: 06/01/19 - 06/30/19

Asset Position As of 06/30/19

Asset Description	Units	Market Value Cost	Est. Annual Income Accruals	Current Yield
Oakland Calif Pension Oblig Taxable Pension Oblig Bd Taxable Zero Cpn Dtd 10/17/2001 Due 12/15/2019 Non-Callable	60,000.000	59,318.40 59,192.64	0.00	0.00%
Philip Morris Intl Inc Sr Nt 4.50% Dtd 03/26/2010 Due 03/26/2020 Non-Callable	80,000.000	81,213.60 81,968.00	3,600.00 950.00	4.43%
Port Morrow Ore Transmission F Rev Bds Taxable 2.737% Dtd 08/26/2015 Due 09/01/2021 Callable	200,000.000	202,678.00 205,450.00	5,474.00 1,824.66	2.70%
Starbucks Corp Sr Glbl 2.10% Dtd 02/04/2016 Due 02/04/2021 Callable	50,000.000	49,830.00 49,987.00	1,050.00 428.75	2.11%
3M Co Fr 2.00% Dtd 06/26/2012 Due 06/26/2022 Non-Callable	100,000.000	99,913.00 99,201.00	2,000.00 27.77	2.00%
US Treasury Note 1.625% Dtd 11/30/2015 Due 11/30/2020	175,000.000	174,471.50 171,962.32	2,843.00 240.86	1.63%
US Treasury Note 2.00% Dtd 07/31/2013 Due 07/31/2020	40,000.000	40,031.20 39,694.76	800.00 333.70	2.00%
US Treasury Note 1.625% Dtd 03/15/2017 Due 03/15/2020	120,000.000	119,658.00 119,701.23	1,950.00 572.28	1.63%
US Treasury Note 2.75% Dtd 09/15/2018 Due 09/15/2021	100,000.000	102,235.00 99,695.31	2,750.00 807.06	2.69%
United Technologies Corp Sr Glbl 2.30% Dtd 05/04/2017 Due 05/04/2022 Callable	250,000.000	249,785.00 241,684.88	5,750.00 910.41	2.30%
Waco Tex Indpt Sch Dist Ref Bds Taxable 4.00% Dtd 12/01/2012 Due 02/15/2020 Non-Callable	270,000.000	272,673.00 277,152.30	10,800.00 4,080.00	3.96%
Wells Fargo & Co New Sr Glbl 2.50% Dtd 03/04/2016 Due 03/04/2021 Non-Callable	250,000.000	250,545.00 248,550.00	6,250.00 2,031.24	2.49%
Total Fixed Income		**$ 7,016,755.92** **$ 7,012,987.58**	**161,855.00** **37,778.79**	**2.31%**

BANK OF THE WEST
BNP PARIBAS
WEALTH MANAGEMENT

WBSD - OPERATING RESERVE

Account Number:
Statement Period: 06/01/19 - 06/30/19

Asset Position As of 06/30/19

Asset Description	Units	Market Value Cost	Est. Annual Income Accruals	Current Yield
Cash				
Principal Cash		0.00 0.00	0.00	0.00%
Income Cash		0.00 0.00	0.00	0.00%
Total Cash		**$ 0.00** **$ 0.00**	**0.00** **0.00**	**0.00%**
Total Market Value		**$ 7,153,653.62** **$ 7,149,885.28**	**164,976.00** **38,022.85**	**2.31%**
Total Market Value Plus Accruals		**$ 7,191,676.47**		

Income Activity

	Date	Income Cash	Principal Cash
Interest Income			
Bank of The West Advantage Acct Int To 05/31/19	06/03/19		304.57
Federal Home Ln Mtg Corp Partn Gold Group #G13107 5.500% Dtd 03/01/2008 Due 07/01/2020 IPD14 Int For May 2019 on 1577.86	06/17/19		7.23
Federal Home Ln Mtg Corp Partn Gold Group #G11940 5.500% Dtd 03/01/2006 Due 05/01/2020 IPD14 Int For May 2019 on 2183.70	06/17/19		10.01
Federal Home Loan Bks Cons Bds 2.50% Dtd 03/15/2018 Due 09/15/2020 Callable Interest on Full Call of	06/17/19		750.00
Federal Farm Cr Bks Cons Systemwide Bds 3.37% Dtd 12/05/2018 Due 12/05/2022 Callable Int 12/05/18 To 06/05/19 on 150000	06/05/19		2,527.50
Federal Home Loan Bks Cons Bds 4.625% Dtd 05/25/2005 Due 06/12/2020 Non-Callable Int To 06/12/19 on 200,000	06/12/19		4,625.00

WBSD - OPERATING RESERVE

Account Number:
Statement Period: 06/01/19 - 06/30/19

Income Activity

	Date	Income Cash	Principal Cash
Federal Home Loan Bks Cons Bds 4.125% Dtd 11/13/2009 Due 12/13/2019 Non-Callable Int To 06/13/19 on 200,000	06/13/19		4,125.00
Federal Home Loan Bks Cons Bds 1.75% Dtd 06/03/2013 Due 06/12/2020 Non-Callable Int To 06/12/19 on 60,000	06/12/19		525.00
Federal Natl Mtg Assn 1.875% Dtd 11/16/2015 Due 12/28/2020 Non-Callable Int To 06/28/19 on 60,000	06/28/19		562.50
Federal Natl Mtg Assn Gtd REMIC Passthru Tr REMIC Tr Ser 2009 M1 Cl A2 4.287% Dtd 10/01/2009 Due 07/25/2019 IPD24 Int To 06/01/19 on 1774.29	06/25/19		6.34
Federal Natl Mtg Assn Gtd Passthru CTF Pool #797828 5.000% Dtd 04/01/2005 Due 04/01/2020 IPD24 Int For May 2019 on 11045.21	06/25/19		46.02
Keybank National Association Regs Bd 2.50% Dtd 11/24/2014 Due 12/15/2019 Non-Callable Int To 06/15/19 on 250,000	06/17/19		3,125.00
Small Business Admin Gtd Ln Pool Ctfs #508468 Prime -0.175 Adj Quarterly Dtd 06/01/2008 Due 04/25/2020 Int To 05/01/19 on 1911.83	06/25/19		8.48
3M Co Fr 2.00% Dtd 06/26/2012 Due 06/26/2022 Non-Callable Int To 06/26/19 on 100,000	06/26/19		1,000.00
Total Interest Income		**$ 0.00**	**$ 17,622.65**
Total Income		**$ 0.00**	**$ 17,622.65**

WBSD - OPERATING RESERVE

Account Number:
Statement Period: 06/01/19 - 06/30/19

Disbursement Activity

	Date	Income Cash	Principal Cash
To/For Beneficiary			
West Bay Sanitary District ACH Transfer To Bank of The West Ckg#XXXXX6049 Per Verbal Instructions Dtd 5/31/19 ACH Form Dtd 9/13/18	06/04/19		-175,000.00
West Bay Sanitary District ACH Transfer To Bank of The West Ckg#XXXXX6049 Per Verbal Instructions Dtd 6/14/19 ACH Form Dtd 9/13/18	06/14/19		-162,000.00
Total To/For Beneficiary		**$ 0.00**	**$ -337,000.00**
Fees/Expenses			
Monthly Fee To 05/31/19	06/14/19		-1,187.58
Total Fees/Expenses		**$ 0.00**	**$ -1,187.58**
Total Disbursements		**$ 0.00**	**$ -338,187.58**

Purchase Activity

	Date	Income Cash	Principal Cash
Bank of The West Advantage Acct Purchases (8) 06/01/19 To 06/30/19	06/30/19		-294,213.74
Total Purchases		**$ 0.00**	**$ -294,213.74**

Sale Activity

	Date	Proceeds	Realized Gain/Loss
Bank of The West Advantage Acct Sales (3) 06/01/19 To 06/30/19	06/30/19	338,187.58	
Federal Home Ln Mtg Corp Partn Gold Group #G13107 5.500% Dtd 03/01/2008 Due 07/01/2020 IPD14 Prin Pmt For May 2019	06/17/19	391.89	-19.84
Federal Home Ln Mtg Corp Partn Gold Group #G11940 5.500% Dtd 03/01/2006 Due 05/01/2020 IPD14 Prin Pmt For May 2019	06/17/19	649.30	-35.71

WBSD - OPERATING RESERVE

Account Number:
Statement Period: **06/01/19 - 06/30/19**

Sale Activity

	Date	Proceeds	Realized Gain/Loss
Federal Home Loan Bks Cons Bds 2.50% Dtd 03/15/2018 Due 09/15/2020 Callable Recd Proceeds on Full Call of 120,000 Par Value	06/17/19	120,000.00	90.00
Federal Farm Cr Bks Cons Systemwide Bds 3.37% Dtd 12/05/2018 Due 12/05/2022 Callable Recd Proceeds on Full Call of 150,000 Par Value	06/05/19	150,000.00	
Federal Natl Mtg Assn Gtd REMIC Passthru Tr REMIC Tr Ser 2009 M1 Cl A2 4.287% Dtd 10/01/2009 Due 07/25/2019 IPD24 Prin Pmt For 06/01/19	06/25/19	1,705.07	-121.49
Federal Natl Mtg Assn Gtd Passthru CTF Pool #797828 5.000% Dtd 04/01/2005 Due 04/01/2020 IPD24 Prin Pmt For May 2019	06/25/19	1,933.00	-107.52
Small Business Admin Gtd Ln Pool Ctfs #508468 Prime -0.175 Adj Quarterly Dtd 06/01/2008 Due 04/25/2020 Recd Proceeds on Final Paydown of 1,911.830 Par Value	06/25/19	1,911.83	-82.45
Total Sales		**$ 614,778.67**	**$ -277.01**

Non-Cash Activity

	Date	Cost
Federal Home Loan Bks Cons Bds 4.625% Dtd 05/25/2005 Due 06/12/2020 Non-Callable Amortization of Premium	06/12/19	-3,000.00
Federal Home Loan Bks Cons Bds 4.125% Dtd 11/13/2009 Due 12/13/2019 Non-Callable Amortization of Premium	06/13/19	-2,610.00
Federal Home Loan Bks Cons Bds 1.75% Dtd 06/03/2013 Due 06/12/2020 Non-Callable Amortization of Premium	06/12/19	-69.00

WBSD - OPERATING RESERVE

Account Number:
Statement Period: **06/01/19 - 06/30/19**

Non-Cash Activity

	Date	Cost
Federal Natl Mtg Assn 1.875% Dtd 11/16/2015 Due 12/28/2020 Non-Callable Amortization of Premium	06/28/19	-188.40
Federal Natl Mtg Assn 1.375% Dtd 02/05/2016 Due 02/26/2021 Non-Callable Accretion of Discount	06/28/19	21.38
Federal Natl Mtg Assn 1.25% Dtd 05/16/2016 Due 05/06/2021 Non-Callable Accretion of Discount	06/28/19	43.35
Federal Natl Mtg Assn 1.375% Dtd 10/07/2016 Due 10/07/2021 Non-Callable Accretion of Discount	06/28/19	25.07
Federal Natl Mtg Assn 2.00% Dtd 01/09/2017 Due 01/05/2022 Non-Callable Accretion of Discount	06/28/19	45.06
Federal Home Ln Mtg Corp 1.375% Dtd 04/04/2013 Due 05/01/2020 Non-Callable Accretion of Discount	06/28/19	9.74
Keybank National Association Regs Bd 2.50% Dtd 11/24/2014 Due 12/15/2019 Non-Callable Amortization of Premium	06/14/19	-245.00
Oakland Calif Pension Oblig Taxable Pension Oblig Bd Taxable Zero Cpn Dtd 10/17/2001 Due 12/15/2019 Non-Callable Original Issue Discount	06/28/19	146.75
3M Co Fr 2.00% Dtd 06/26/2012 Due 06/26/2022 Non-Callable Accretion of Discount	06/28/19	22.27
United Technologies Corp Sr Glbl 2.30% Dtd 05/04/2017 Due 05/04/2022 Callable Accretion of Discount	06/28/19	243.60
Total Non-Cash Transactions		**$ -5,555.18**

BANK OF THE WEST
BNP PARIBAS
WEALTH MANAGEMENT

WBSD - OPERATING RESERVE

Account Number:
Statement Period: 06/01/19 - 06/30/19

SECURITY PRICES CONTAINED IN THIS STATEMENT ARE OBTAINED FROM THE MOST RELIABLE SOURCES AVAILABLE BUT ARE NOT GUARANTEED BY BANK OF THE WEST. QUQTED PRICES MAY NOT EQUAL ACTUAL PRICES BECAUSE OF SECURITY SIZE, MARKET PRICE, TERM AND DEMAND.

BANK OF THE WEST
BNP PARIBAS
WEALTH MANAGEMENT

WBSD - RATE STABILIZATION RESERVE

Account Number:
Statement Period: 06/01/19 - 06/30/19

WEST BAY SANITARY DISTRICT
RATE STABILIZATION RESERVE
500 LAUREL STREET
MENLO PARK CA 94025

Fiduciary
Chuen Ying Lee
(408) 645-3234
Portfolio
Michael D. Smith
(408) 490-2079

Asset Allocation

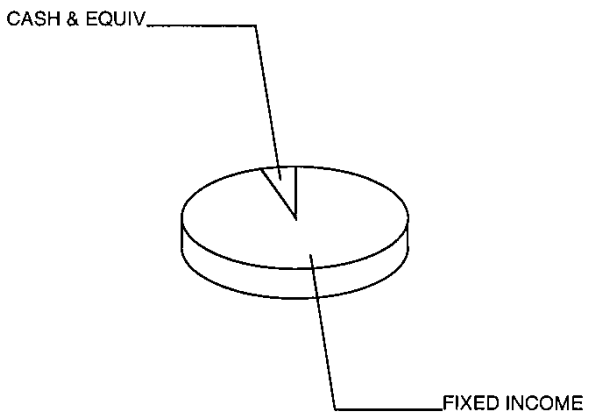

Asset Valuation

Description	Market Value	% of Account
Cash & Equiv	326,735.58	5.4%
Fixed Income	5,711,274.24	94.6%
Total Portfolio	**$ 6,038,009.82**	**100.0%**
Accrued Income	43,970.25	
Total Valuation	**$ 6,081,980.07**	

Market Reconcilement

	Current Period	Year To Date
Beginning Market Value	**$ 6,350,560.63**	**$ 5,577,745.28**
Income		
Interest	11,844.36	166,595.36
Purchased Income	0.00	-4,722.81
Additions	0.00	1,000,000.00
Disbursements	-292,004.01	-725,412.76
Realized Gains/(Losses)	174.76	490.28
Change In Accrued Income	699.15	-5,559.66
Change In Market Appreciation/(Depreciation)	11,846.16	120,742.14
Non-Cash Asset Changes	-1,140.98	-47,897.76
Ending Market Value	**$ 6,081,980.07**	**$ 6,081,980.07**

BANK OF THE WEST
BNP PARIBAS
WEALTH MANAGEMENT

WBSD - RATE STABILIZATION RESERVE

Account Number:
Statement Period: 06/01/19 - 06/30/19

Asset Position As of 06/30/19

Asset Description	Units	Market Value Cost	Est. Annual Income Accruals	Current Yield
Cash Equivalents				
Bank of The West Advantage Acct	326,735.580	326,735.58 326,735.58	7,449.00 372.67	2.28%
Total Cash Equivalents		**$ 326,735.58** **$ 326,735.58**	**7,449.00** **372.67**	**2.28%**
Fixed Income				
Federal Home Loan Bks Cons Bds 1.85% Dtd 08/15/2017 Due 08/15/2022 Non-Callable	235,000.000	235,556.95 236,327.75	4,347.00 1,642.38	1.85%
Federal Home Loan Bks Cons Bds 3.00% Dtd 09/27/2018 Due 09/27/2021 Callable	120,000.000	120,026.40 120,000.00	3,600.00 940.00	3.00%
Federal Home Loan Bks Cons Bds 3.17% Dtd 10/25/2018 Due 10/25/2021 Callable	300,000.000	300,984.00 300,000.00	9,510.00 1,743.50	3.16%
Federal Farm Cr Bks Cons Systemwide Bds 2.40% Dtd 06/17/2015 Due 06/17/2022 Non-Callable	235,000.000	238,973.85 239,237.05	5,640.00 219.33	2.36%
Federal Farm Cr Bks Cons Systemwide Bds 1.90% Dtd 07/19/2017 Due 07/19/2022 Non-Callable	80,000.000	80,200.80 80,269.60	1,520.00 683.99	1.90%
Federal Farm Cr Bks Cons Systemwide Bds 1.72% Dtd 07/26/2017 Due 07/26/2021 Non-Callable	235,000.000	234,706.25 235,451.20	4,042.00 1,740.30	1.72%
Federal Farm Cr Bks Cons Systemwide Bds 1.90% Dtd 08/03/2017 Due 08/03/2022 Non-Callable	85,000.000	85,206.55 85,157.25	1,615.00 663.94	1.90%
Federal Farm Cr Bks Cons Systemwide Bds 3.17% Dtd 09/19/2018 Due 09/19/2022 Callable	170,000.000	170,401.20 170,000.00	5,389.00 1,526.88	3.16%
Federal Home Loan Bks Cons Bds 4.50% Dtd 08/12/2009 Due 09/13/2019 Non-Callable	100,000.000	100,447.00 101,529.00	4,500.00 1,350.00	4.48%
Federal Home Loan Bks Cons Bds 1.625% Dtd 11/07/2012 Due 12/10/2021 Non-Callable	235,000.000	234,060.00 234,353.75	3,818.00 222.76	1.63%

BANK OF THE WEST
BNP PARIBAS
WEALTH MANAGEMENT

WBSD - RATE STABILIZATION RESERVE

Account Number:
Statement Period: 06/01/19 - 06/30/19

Asset Position As of 06/30/19

Asset Description	Units	Market Value Cost	Est. Annual Income Accruals	Current Yield
Federal Home Loan Bks Cons Bds 2.00% Dtd 08/12/2013 Due 09/13/2019 Non-Callable	40,000.000	39,978.80 40,166.40	800.00 239.99	2.00%
Federal Home Ln Mtg Corp Step Cpn Dtd 08/25/2016 Due 08/25/2021 Callable	60,000.000	59,897.40 60,000.00	900.00 315.00	1.50%
Federal Home Ln Mtg Corp 1.50% Dtd 09/30/2016 Due 03/30/2021 Callable	90,000.000	89,438.40 90,000.00	1,350.00 341.25	1.51%
Federal Home Ln Mtg Corp 1.75% Dtd 12/30/2016 Due 12/30/2020 Callable	40,000.000	39,784.40 40,000.00	700.00 351.94	1.76%
Federal Home Ln Mtg Corp 1.60% Dtd 05/15/2017 Due 05/15/2020 Callable	40,000.000	39,892.00 40,000.00	640.00 81.77	1.60%
Federal Natl Mtg Assn 1.50% Dtd 10/19/2015 Due 11/30/2020 Non-Callable	250,000.000	248,810.00 249,517.50	3,750.00 322.91	1.51%
Federal Natl Mtg Assn 1.375% Dtd 02/05/2016 Due 02/26/2021 Non-Callable	235,000.000	233,230.45 233,363.23	3,231.00 1,121.96	1.39%
Federal Natl Mtg Assn 1.25% Dtd 05/16/2016 Due 05/06/2021 Non-Callable	130,000.000	128,688.30 129,148.31	1,625.00 248.26	1.26%
Federal Natl Mtg Assn 1.25% Dtd 08/19/2016 Due 08/17/2021 Non-Callable	130,000.000	128,551.80 128,867.35	1,625.00 604.86	1.26%
Federal Natl Mtg Assn 1.375% Dtd 10/07/2016 Due 10/07/2021 Non-Callable	235,000.000	232,713.45 233,577.95	3,231.00 753.95	1.39%
Federal Natl Mtg Assn 2.00% Dtd 01/09/2017 Due 01/05/2022 Non-Callable	235,000.000	236,292.50 237,432.25	4,700.00 2,297.77	1.99%
Federal Natl Mtg Assn 1.875% Dtd 04/10/2017 Due 04/05/2022 Non-Callable	95,000.000	95,195.70 95,240.35	1,781.00 425.52	1.87%
Federal Natl Mtg Assn 1.50% Dtd 11/27/2012 Due 11/27/2020 Callable	120,000.000	119,150.40 117,692.95	1,800.00 170.00	1.51%

BANK OF THE WEST
BNP PARIBAS
WEALTH MANAGEMENT

WBSD - RATE STABILIZATION RESERVE

Account Number:
Statement Period: 06/01/19 - 06/30/19

Asset Position As of 06/30/19

Asset Description	Units	Market Value Cost	Est. Annual Income Accruals	Current Yield
Federal Home Ln Mtg Corp 2.375% Dtd 01/13/2012 Due 01/13/2022 Non-Callable	235,000.000	238,470.95 240,029.00	5,581.00 2,604.58	2.34%
Federal Home Ln Mtg Corp 1.375% Dtd 04/04/2013 Due 05/01/2020 Non-Callable	200,000.000	198,858.00 199,472.00	2,750.00 458.33	1.38%
Federal Home Ln Mtg Corp 1.50% Dtd 01/17/2017 Due 01/17/2020 Non-Callable	250,000.000	249,115.00 250,105.00	3,750.00 1,708.33	1.51%
Federal Natl Mtg Assn Gtd Passthru CTF Pool #466584 3.470% Dtd 11/01/2010 Due 11/01/2020 IPD24	67,842.220	68,594.59 72,845.57	2,354.00 196.17	3.43%
Florida St Brd Admin Fin Corp Rev Bds 2016a Taxable 2.163% Dtd 03/08/2016 Due 07/01/2019 Callable	40,000.000	40,000.00 40,175.20	865.00 432.59	2.16%
Silicon Vy Clean Wtr Calif Was Rev Bds 4.00% Dtd 11/24/2015 Due 08/01/2019 Non-Callable --- 335,000 Restricted ---	335,000.000	335,790.60 340,169.05	13,400.00 5,583.33	3.99%
Silicon Vy Clean Wtr Calif Was Rev Bds 5.00% Dtd 11/24/2015 Due 08/01/2020 Non-Callable --- 650,000 Restricted ---	650,000.000	677,508.00 687,414.00	32,500.00 13,541.66	4.80%
Skagit Cnty Wash Sch Dist No 1 GO Bds 2011b Taxable 4.013% Dtd 06/01/2011 Due 12/01/2019 Non-Callable	50,000.000	50,315.50 50,673.50	2,006.00 167.20	3.99%
US Treasury Note 1.625% Dtd 11/30/2015 Due 11/30/2020	300,000.000	299,094.00 294,792.56	4,875.00 412.90	1.63%
US Treasury Note 2.75% Dtd 09/15/2018 Due 09/15/2021	60,000.000	61,341.00 59,817.19	1,650.00 484.23	2.69%
Total Fixed Income		**$ 5,711,274.24** **$ 5,732,824.96**	**139,845.00** **43,597.58**	**2.45%**
Cash				
Principal Cash		0.00 0.00	0.00	0.00%

BANK OF THE WEST
BNP PARIBAS
WEALTH MANAGEMENT

WBSD - RATE STABILIZATION RESERVE

Account Number:
Statement Period: 06/01/19 - 06/30/19

Asset Position As of 06/30/19

Asset Description	Units	Market Value Cost	Est. Annual Income Accruals	Current Yield
Income Cash		0.00 0.00	0.00	0.00%
Total Cash		**$ 0.00** **$ 0.00**	**0.00** **0.00**	**0.00%**
Total Market Value		**$ 6,038,009.82** **$ 6,059,560.54**	**147,294.00** **43,970.25**	**2.44%**
Total Market Value Plus Accruals		**$ 6,081,980.07**		

Income Activity

	Date	Income Cash	Principal Cash
Interest Income			
Bank of The West Advantage Acct Int To 05/31/19	06/03/19		51.80
Arizona Brd Regents Ctfs Partn Ref Cops 2015b Taxable 1.62% Dtd 05/12/2015 Due 06/01/2019 Callable Int To 06/01/19 on 100,000	06/03/19		810.00
Federal Home Loan Bks Cons Bds 2.50% Dtd 03/15/2018 Due 09/15/2020 Callable Interest on Full Call of	06/17/19		625.00
Federal Farm Cr Bks Cons Systemwide Bds 2.40% Dtd 06/17/2015 Due 06/17/2022 Non-Callable Int To 06/17/19 on 235,000	06/17/19		2,820.00
Federal Farm Cr Bks Cons Systemwide Bds 2.75% Dtd 03/01/2018 Due 09/01/2021 Callable Interest on Full Call of	06/14/19		786.81
Federal Farm Cr Bks Cons Systemwide Bds 3.37% Dtd 12/05/2018 Due 12/05/2022 Callable Int 12/05/18 To 06/05/19 on 100000	06/05/19		1,685.00
Federal Home Loan Bks Cons Bds 1.625% Dtd 11/07/2012 Due 12/10/2021 Non-Callable Int To 06/10/19 on 235,000	06/10/19		1,909.37

BANK OF THE WEST
BNP PARIBAS
WEALTH MANAGEMENT

WBSD - RATE STABILIZATION RESERVE

Account Number:
Statement Period: 06/01/19 - 06/30/19

Income Activity

	Date	Income Cash	Principal Cash
Federal Home Ln Mtg Corp 3.25% Dtd 06/28/2018 Due 06/28/2023 Callable Int To 06/28/19 on 120,000	06/28/19		1,950.00
Federal Natl Mtg Assn Gtd Passthru CTF Pool #466584 3.470% Dtd 11/01/2010 Due 11/01/2020 IPD24 Int For May 2019 on 67981.07	06/25/19		203.13
Skagit Cnty Wash Sch Dist No 1 GO Bds 2011b Taxable 4.013% Dtd 06/01/2011 Due 12/01/2019 Non-Callable Int To 06/01/19 on 50,000	06/03/19		1,003.25
Total Interest Income		**$ 0.00**	**$ 11,844.36**
Total Income		**$ 0.00**	**$ 11,844.36**

Disbursement Activity

	Date	Income Cash	Principal Cash
To/For Beneficiary			
West Bay Sanitary District ACH Transfer To Bank of The West Ckg#XXXXX6049 Per Verbal Instructions Dtd 5/31/19 ACH Form Dtd 9/13/18	06/04/19		-80,000.00
West Bay Sanitary District ACH Transfer To Bank of The West Ckg#XXXXX6049 Per Verbal Instructions Dtd 6/14/19 ACH Form Dtd 9/13/18	06/14/19		-211,000.00
Total To/For Beneficiary		**$ 0.00**	**$ -291,000.00**
Fees/Expenses			
Monthly Fee To 05/31/19	06/14/19		-1,004.01
Total Fees/Expenses		**$ 0.00**	**$ -1,004.01**
Total Disbursements		**$ 0.00**	**$ -292,004.01**

BANK OF THE WEST
BNP PARIBAS
WEALTH MANAGEMENT

WBSD - RATE STABILIZATION RESERVE

Account Number:
Statement Period: 06/01/19 - 06/30/19

Purchase Activity

	Date	Income Cash	Principal Cash
Bank of The West Advantage Acct Purchases (6) 06/01/19 To 06/30/19	06/30/19		-431,196.40
Total Purchases		**$ 0.00**	**$ -431,196.40**

Sale Activity

	Date	Proceeds	Realized Gain/Loss
Bank of The West Advantage Acct Sales (3) 06/01/19 To 06/30/19	06/30/19	191,217.20	
Arizona Brd Regents Ctfs Partn Ref Cops 2015b Taxable 1.62% Dtd 05/12/2015 Due 06/01/2019 Callable Recd Proceeds on Maturity of 100,000 Par Value	06/03/19	100,000.00	
Federal Home Loan Bks Cons Bds 2.50% Dtd 03/15/2018 Due 09/15/2020 Callable Recd Proceeds on Full Call of 100,000 Par Value	06/17/19	100,000.00	75.00
Federal Farm Cr Bks Cons Systemwide Bds 2.75% Dtd 03/01/2018 Due 09/01/2021 Callable Recd Proceeds on Full Call of 100,000 Par Value	06/14/19	100,000.00	50.00
Federal Farm Cr Bks Cons Systemwide Bds 3.37% Dtd 12/05/2018 Due 12/05/2022 Callable Recd Proceeds on Full Call of 100,000 Par Value	06/05/19	100,000.00	
Federal Home Ln Mtg Corp 3.25% Dtd 06/28/2018 Due 06/28/2023 Callable Recd Proceeds on Full Call of 120,000 Par Value	06/28/19	120,000.00	60.00
Federal Natl Mtg Assn Gtd Passthru CTF Pool #466584 3.470% Dtd 11/01/2010 Due 11/01/2020 IPD24 Prin Pmt For May 2019	06/25/19	138.85	-10.24
Total Sales		**$ 711,356.05**	**$ 174.76**

BANK OF THE WEST
BNP PARIBAS
WEALTH MANAGEMENT

WBSD - RATE STABILIZATION RESERVE

Account Number:
Statement Period: 06/01/19 - 06/30/19

Non-Cash Activity

	Date	Cost
Arizona Brd Regents Ctfs Partn Ref Cops 2015b Taxable 1.62% Dtd 05/12/2015 Due 06/01/2019 Callable Amortization of Premium	06/03/19	-59.00
Federal Farm Cr Bks Cons Systemwide Bds 2.40% Dtd 06/17/2015 Due 06/17/2022 Non-Callable Amortization of Premium	06/17/19	-683.85
Federal Natl Mtg Assn 1.25% Dtd 05/16/2016 Due 05/06/2021 Non-Callable Accretion of Discount	06/28/19	38.36
Federal Natl Mtg Assn 1.25% Dtd 08/19/2016 Due 08/17/2021 Non-Callable Accretion of Discount	06/28/19	44.30
Federal Natl Mtg Assn 1.375% Dtd 10/07/2016 Due 10/07/2021 Non-Callable Accretion of Discount	06/28/19	52.21
Federal Natl Mtg Assn 1.50% Dtd 11/27/2012 Due 11/27/2020 Callable Accretion of Discount	06/28/19	136.50
Skagit Cnty Wash Sch Dist No 1 GO Bds 2011b Taxable 4.013% Dtd 06/01/2011 Due 12/01/2019 Non-Callable Amortization of Premium	06/03/19	-669.50
Total Non-Cash Transactions		**$ -1,140.98**

SECURITY PRICES CONTAINED IN THIS STATEMENT ARE OBTAINED FROM THE MOST RELIABLE SOURCES AVAILABLE BUT ARE NOT GUARANTEED BY BANK OF THE WEST. QUOTED PRICES MAY NOT EQUAL ACTUAL PRICES BECAUSE OF SECURITY SIZE, MARKET PRICE, TERM AND DEMAND.

BANK OF THE WEST
BNP PARIBAS
WEALTH MANAGEMENT

WBSD - RECYCLED WATER CASH FLOW

Account Number:
Statement Period: 06/01/19 - 06/30/19

WEST BAY SANITARY DISTRICT
RECYCLED WATER CASH FLOW
500 LAUREL STREET
MENLO PARK CA 94025

Fiduciary
Chuen Ying Lee
(408) 645-3234
Portfolio
Michael D. Smith
(408) 490-2079

Asset Allocation

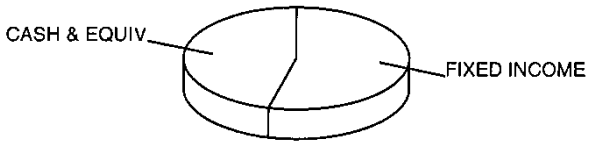

Asset Valuation

Description	Market Value	% of Account
Cash & Equiv	103,148.34	46.3%
Fixed Income	119,845.20	53.7%
Total Portfolio	**$ 222,993.54**	**100.0%**
Accrued Income	531.01	
Total Valuation	**$ 223,524.55**	

Market Reconcilement

	Current Period	Year To Date
Beginning Market Value	**$ 223,031.51**	**$ 3,899,477.54**
Income		
Interest	10.89	60,487.36
Disbursements	-35.47	-3,706,207.52
Realized Gains/(Losses)	0.00	-9,952.31
Change In Accrued Income	349.62	-27,689.68
Change In Market Appreciation/(Depreciation)	168.00	28,689.47
Non-Cash Asset Changes	0.00	-21,280.31
Ending Market Value	**$ 223,524.55**	**$ 223,524.55**

BANK OF THE WEST
BNP PARIBAS
WEALTH MANAGEMENT

WBSD - RECYCLED WATER CASH FLOW

Account Number:
Statement Period: 06/01/19 - 06/30/19

Asset Position As of 06/30/19

Asset Description	Units	Market Value Cost	Est. Annual Income Accruals	Current Yield
Cash Equivalents				
Bank of The West Advantage Acct	103,148.340	103,148.34 103,148.34	2,351.00 195.51	2.28%
Total Cash Equivalents		**$ 103,148.34** **$ 103,148.34**	**2,351.00** **195.51**	**2.28%**
Fixed Income				
Federal Home Ln Mtg Corp 1.65% Dtd 10/30/2017 Due 10/30/2019 Callable	120,000.000	119,845.20 120,000.00	1,980.00 335.50	1.65%
Total Fixed Income		**$ 119,845.20** **$ 120,000.00**	**1,980.00** **335.50**	**1.65%**
Cash				
Principal Cash		0.00 0.00	0.00	0.00%
Income Cash		0.00 0.00	0.00	0.00%
Total Cash		**$ 0.00** **$ 0.00**	**0.00** **0.00**	**0.00%**
Total Market Value		**$ 222,993.54** **$ 223,148.34**	**4,331.00** **531.01**	**1.94%**
Total Market Value Plus Accruals		**$ 223,524.55**		

Income Activity

	Date	Income Cash	Principal Cash
Interest Income			
Bank of The West Advantage Acct Int To 05/31/19	06/03/19		10.89
Total Interest Income		**$ 0.00**	**$ 10.89**
Total Income		**$ 0.00**	**$ 10.89**

BANK OF THE WEST
BNP PARIBAS
WEALTH MANAGEMENT

WBSD - RECYCLED WATER CASH FLOW

Account Number:
Statement Period: 06/01/19 - 06/30/19

Disbursement Activity

	Date	Income Cash	Principal Cash
Fees/Expenses			
Monthly Fee To 05/31/19	06/14/19		-35.47
Total Fees/Expenses		**$ 0.00**	**$ -35.47**
Total Disbursements		**$ 0.00**	**$ -35.47**

Purchase Activity

	Date	Income Cash	Principal Cash
Bank of The West Advantage Acct Purchases (1) 06/01/19 To 06/30/19	06/30/19		-10.89
Total Purchases		**$ 0.00**	**$ -10.89**

Sale Activity

	Date	Proceeds	Realized Gain/Loss
Bank of The West Advantage Acct Sales (1) 06/01/19 To 06/30/19	06/30/19	35.47	
Total Sales		**$ 35.47**	**$ 0.00**

SECURITY PRICES CONTAINED IN THIS STATEMENT ARE OBTAINED FROM THE MOST RELIABLE SOURCES AVAILABLE BUT ARE NOT GUARANTEED BY BANK OF THE WEST. QUOTED PRICES MAY NOT EQUAL ACTUAL PRICES BECAUSE OF SECURITY SIZE, MARKET PRICE, TERM AND DEMAND.

BANK OF THE WEST
BNP PARIBAS
WEALTH MANAGEMENT

WBSD - RECYCLED WATER SRF RESERVE

Account Number:
Statement Period: 06/01/19 - 06/30/19

WEST BAY SANITARY DISTRICT
RECYCLED WATER SRF RESERVE
500 LAUREL STREET
MENLO PARK CA 94025

Fiduciary
Chuen Ying Lee
(408) 645-3234
Portfolio
Michael D. Smith
(408) 490-2079

Asset Allocation

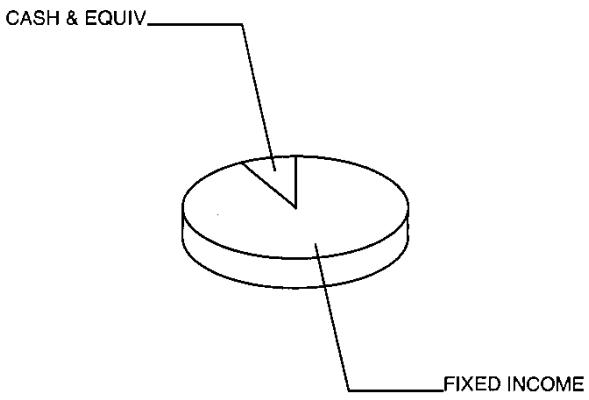

Asset Valuation

Description	Market Value	% of Account
Cash & Equiv	67,307.69	8.1%
Fixed Income	766,635.32	91.9%
Total Portfolio	**$ 833,943.01**	**100.0%**
Accrued Income	4,921.77	
Total Valuation	**$ 838,864.78**	

Market Reconcilement

	Current Period	Year To Date
Beginning Market Value	**$ 836,098.78**	**$ 810,212.35**
Income		
Interest	2,312.38	23,218.88
Purchased Income	-2,458.59	-3,997.60
Disbursements	-132.58	-1,488.35
Realized Gains/(Losses)	75.00	183.00
Change In Accrued Income	1,743.36	2,059.29
Change In Market Appreciation/(Depreciation)	1,655.32	8,164.48
Non-Cash Asset Changes	-428.89	512.73
Ending Market Value	**$ 838,864.78**	**$ 838,864.78**

BANK OF THE WEST
BNP PARIBAS
WEALTH MANAGEMENT

WBSD - RECYCLED WATER SRF RESERVE

Account Number:
Statement Period: **06/01/19 - 06/30/19**

Asset Position As of 06/30/19

Asset Description	Units	Market Value Cost	Est. Annual Income Accruals	Current Yield
Cash Equivalents				
Bank of The West Advantage Acct	67,307.690	67,307.69 67,307.69	1,534.00 342.87	2.28%
Total Cash Equivalents		**$ 67,307.69** **$ 67,307.69**	**1,534.00** **342.87**	**2.28%**
Fixed Income				
Federal Home Loan Bks Cons Bds 2.00% Dtd 10/30/2017 Due 04/30/2021 Callable	100,000.000	100,006.00 97,788.51	2,000.00 338.88	2.00%
Federal Farm Cr Bks Cons Systemwide Bds 3.65% Dtd 12/21/2010 Due 12/21/2020 Non-Callable	96,000.000	98,494.08 97,537.92	3,504.00 97.33	3.56%
Federal Natl Mtg Assn 1.55% Dtd 10/28/2016 Due 10/28/2021 Callable	80,000.000	79,589.60 78,008.88	1,240.00 216.99	1.56%
US Treasury Note 1.375% Dtd 04/30/2015 Due 04/30/2020	140,000.000	139,273.40 138,578.12	1,925.00 324.32	1.38%
US Treasury Note 3.625% Dtd 02/15/2010 Due 02/15/2020	186,000.000	187,755.84 187,816.41	6,742.00 2,533.09	3.59%
US Treasury Note 2.00% Dtd 09/30/2013 Due 09/30/2020	20,000.000	20,031.00 19,874.21	400.00 100.54	2.00%
US Treasury Note 2.75% Dtd 09/30/2018 Due 09/30/2020	140,000.000	141,485.40 140,754.68	3,850.00 967.75	2.72%
Total Fixed Income		**$ 766,635.32** **$ 760,358.73**	**19,661.00** **4,578.90**	**2.56%**
Cash				
Principal Cash		0.00 0.00	0.00	0.00%
Income Cash		0.00 0.00	0.00	0.00%
Total Cash		**$ 0.00** **$ 0.00**	**0.00** **0.00**	**0.00%**

BANK OF THE WEST
BNP PARIBAS
WEALTH MANAGEMENT

WBSD - RECYCLED WATER SRF RESERVE

Account Number:
Statement Period: 06/01/19 - 06/30/19

Asset Position As of 06/30/19

Asset Description	Units	Market Value Cost	Est. Annual Income Accruals	Current Yield
Total Market Value		**$ 833,943.01** **$ 827,666.42**	**21,195.00** **4,921.77**	**2.54%**
Total Market Value Plus Accruals		**$ 838,864.78**		

Income Activity

	Date	Income Cash	Principal Cash
Interest Income			
Bank of The West Advantage Acct Int To 05/31/19	06/03/19		155.38
Federal Farm Cr Bks Cons Systemwide Bds 3.65% Dtd 12/21/2010 Due 12/21/2020 Non-Callable Int To 06/21/19 on 96,000	06/21/19		1,752.00
Federal Home Ln Mtg Corp 2.70% Dtd 03/26/2018 Due 03/26/2021 Callable Interest on Full Call of	06/26/19		405.00
Total Interest Income		**$ 0.00**	**$ 2,312.38**
Purchased Income			
US Treasury Note 3.625% Dtd 02/15/2010 Due 02/15/2020 Accrued Int To 06/27/19 Paid on Purchase of 186,000	06/27/19		-2,458.59
Total Purchased Income		**$ 0.00**	**$ -2,458.59**
Total Income		**$ 0.00**	**$ -146.21**

Disbursement Activity

	Date	Income Cash	Principal Cash
Fees/Expenses			
Monthly Fee To 05/31/19	06/14/19		-132.58
Total Fees/Expenses		**$ 0.00**	**$ -132.58**
Total Disbursements		**$ 0.00**	**$ -132.58**

BANK OF THE WEST
BNP PARIBAS
WEALTH MANAGEMENT

WBSD - RECYCLED WATER SRF RESERVE

Account Number:
Statement Period: 06/01/19 - 06/30/19

Purchase Activity

	Date	Income Cash	Principal Cash
Bank of The West Advantage Acct Purchases (3) 06/01/19 To 06/30/19	06/30/19		-62,312.38
US Treasury Note 3.625% Dtd 02/15/2010 Due 02/15/2020 Purchased 186000 06/26/19 From Wells Fargo Securities, LLC @ 100.976562	06/27/19		-187,816.41
Total Purchases		**$ 0.00**	**$ -250,128.79**

Sale Activity

	Date	Proceeds	Realized Gain/Loss
Bank of The West Advantage Acct Sales (2) 06/01/19 To 06/30/19	06/30/19	190,407.58	
Federal Home Ln Mtg Corp 2.70% Dtd 03/26/2018 Due 03/26/2021 Callable Recd Proceeds on Full Call of 60,000 Par Value	06/26/19	60,000.00	75.00
Total Sales		**$ 250,407.58**	**$ 75.00**

Non-Cash Activity

	Date	Cost
Federal Farm Cr Bks Cons Systemwide Bds 3.65% Dtd 12/21/2010 Due 12/21/2020 Non-Callable Amortization of Premium	06/21/19	-500.16
Federal Natl Mtg Assn 1.55% Dtd 10/28/2016 Due 10/28/2021 Callable Accretion of Discount	06/28/19	71.27
Total Non-Cash Transactions		**$ -428.89**

SECURITY PRICES CONTAINED IN THIS STATEMENT ARE OBTAINED FROM THE MOST RELIABLE SOURCES AVAILABLE BUT ARE NOT GUARANTEED BY BANK OF THE WEST. QUOTED PRICES MAY NOT EQUAL ACTUAL PRICES BECAUSE OF SECURITY SIZE, MARKET PRICE, TERM AND DEMAND.

WEST BAY SANITARY DISTRICT
AGENDA ITEM 5

To: ***Board of Directors***

From: ***Phil Scott, District Manager***

Subject: ***District Manager's Report***

1) **CIP Project:**
   a. **Belle Haven III**: CIP construction began July 23. 98% complete. Started Winchester easement and working on punch list item.
   b. **FERRF Metal Storage Building Update**: Modified design to accommodate for soils report. Submitted to City.
   c. **FERRF Levee Project**: Attended meeting with Army Corp and Regional Board to discuss FERRF Levee Improvement Project and Bayfront Recycled Water Treatment Facility Project and a combined EIR. Discussed sheet piling along the Flood Slough and enhancing the West Slough habitat with a Living Shoreline concept to protect the site from King Tides and Sea Level Rise. Submitted additional information as requested to supplement our application for IRWM grant for a combined project with the Bayfront Recycled Water project.
2) **Affiliate Agency/Association News**:
   a. **Facebook ORTP:** A draft provisional Discharge permit has been written and is being reviewed for Facebook for their Onsite Reuse Treatment Plant. Cannot issue the provisional permit until the State has fully permitted operation of the plant.
3) **Upcoming Events:**
   a. **Board meetings**: July 17 and August 14.
   b. **Union Negotiations:** Presenting MOU for approval July 17.
4) **Misc./Action Items from Previous Meeting**:
   a. **SSOs:** One SSO for June. 2019 Total = 4.
   b. **10 Coyote Hill, PV:** Geotech firm through F&L Engineering performed soil boring March 29th, to help determine cause of erosion on hillside within District easement, document and develop engineering plan for remediation. Reviewing soils report and recommendations.

THIS PAGE LEFT INTENTIONALLY BLANK

WEST BAY
Sanitary District

WEST BAY SANITARY DISTRICT
AGENDA ITEM 6D

To: ***Board of Directors***

From: ***Sergio Ramirez, Operations Superintendent***

Subject: ***WBSD Operations and Maintenance Report – June 2019***

Month	Basin PM Pipe Cleaning Miles	High Freq. PM Pipe Cleaning Miles	Un-Sche. Pipe Cleaning Miles	WBSD CCTV Insp. Miles	Pipe Patch Repairs Qty.	Open Trench Repairs Qty.	Pump Sta. PM Qty.	Pump Sta. Unsch. Repairs Qty.	SSO Cat. 1	SSO Cat. 2&3s	Service Calls- Unit 208 Call Outs	Sch PM	Unsch. PM	USA's
January	10.7	3.6	0.1	1.1	7	6	104	0	0	1	109	29	0	155
February	3.9	6.8	0.5	3.7	5	6	71	1	0	1	65	23	0	209
March	9.3	0.6	0.2	3.3	6	8	70	1	0	0	87	10	3	201
April	9.1	3.4	0.4	3.1	3	8	60	0	0	1	88	8	0	290
May	6.9	7.7	0.3	4.0	0	11	90	1	0	1	71	0	4	289
June	12.0	0.2	0.3	4.8	9	8	74	0	0	0	98	0	12	229
* Oct.	14.9	4.1	0.8	2.9	3	4	120	0	0	0	109	55	1	237
Nov.	6.1	4.7	0.2	2.1	2	7	106	0	0	0	97	25	0	144
Dec	4.8	4.4	0.9	1.9	3	4	106	1	0	0	106	0	8	149
Yr to date	**77.7**	**35.6**	**3.8**	**26.9**	**38**	**62**	**801**	**4**	**0**	**4**	**830**	**150**	**28**	**1903**
2019 Goals	**120.0**	**51.0**	**n/a**	**45-50**	**65**	**90**	**n/a**	**<10**	**0-2**	**4 to 6**	**n/a**	**n/a**	**n/a**	**n/a**
2018 Results	134.2	48.5	7.4	42.1	66	63	1256	6	0	4	1139	134	89	2525
2017 Results	126.4	51.5	5.7	24.8	66	97	1265	8	2	3	700	178	61	3218
2016 Results	126.4	49	6	33	65	94	1188	5	0	8	798	167	155	3222
2015Results	126.4	55	21	46	65	90	1349	6	0	5	798	174	185	2125
2014Results	126.4	63	20	48	65	78	1328	10	2	12	771	183	72	1834

* = Beginning of PMPP year.

THIS PAGE LEFT INTENTIONALLY BLANK

WEST BAY SANITARY DISTRICT
AGENDA ITEM 6E

To: ***Board of Directors***

From: ***Sergio Ramirez, Operations Superintendent***

Subject: ***Town of Los Altos Hills Operations and Maintenance Report for Work Performed by WBSD – June 2019***

Month Temp Help	Basin PM Pipe Clean-ing Miles	High Freq. PM Pipe Clean-ing Miles	Un-Sche. Pipe Clean-ing Miles	WBSD CCTV Insp. Miles	Pump Sta. PM Qty.	Pump Sta. Unsch. Repairs Qty.	SSO Cat. 1	SSO Cat. 2&3s	Service Calls Call Outs
January	3.6	1.3	0.0	1.0	4	1	0	1	0
February	2.2	0.3	0.0	1.4	4	0	0	0	0
March	1.5	0.8	0.0	1.9	4	0	0	0	0
April	1.5	2.8	0.0	1.9	4	0	0	0	0
May	1.1	1.5	0.0	1.0	4	0	0	0	0
June	1.6	0.6	0.0	0.4	4	0	0	0	0
July									
*August	0.0	0.5	0.0	0.8	4	0	0	0	0
Sept.	0.0	3.8	0.0	1.3	4	0	0	0	0
Oct.	1.4	1.3	0.0	1.2	4	1	0	0	0
Nov.	0.5	1.2	0.0	1.0	4	1	0	0	0
Dec	0.4	1.0	0.0	1.0	4	1	0	0	0
Yr to date	**13.8**	**15.1**	**0.0**	**12.9**	**44**	**4**	**0**	**1**	**0**

FY18/19Goals	17.4	16.9	n/a	9.3	52	n/a	n/a	n/a	n/a

* = August- Start of Contract

THIS PAGE LEFT INTENTIONALLY BLANK

WEST BAY SANITARY DISTRICT
AGENDA ITEM 6F

To: ***Board of Directors***

From: ***Bill Kitajima, Projects & IT Manager***
Jonathan Werness, Engineering Technician

Subject: ***Consideration of a Resolution of Intention to Annex Certain Territory (30 Holden Court) to the West Bay Sanitary District On-Site Wastewater Disposal Zone and to Establish the Date and Time of Public Hearing***

Background

This property will utilize a Septic Tank Effluent Pumping (STEP) system; consequently this property must be annexed into the District's On-Site Wastewater Disposal Zone. The proponent shall be required to construct a force main on Holden Court that will eventually connect to the existing force main along Golden Oak Drive.

Notice of the Public Hearing is required in accordance with the Government Code and during the notice period, staff shall seek written approval for the proposed annexation from all affected agencies.

Analysis

During the notice period staff shall work with the proponent to obtain design, easement and other approvals, which shall be presented to the Board when the Class 3 Permit is issued.

Fiscal Impact

None.

Recommendation

The Projects and IT Manager recommends that the District Board adopt the attached Resolution of Intention to Annex Certain Territory to the West Bay Sanitary District On-Site Wastewater Disposal Zone and request September 11, 2019 as the date of the public hearing.

Attachments: Resolution, Exhibit A, Exhibit B

RESOLUTION NO. ____(2019)

RESOLUTION OF INTENTION TO ANNEX CERTAIN TERRITORY TO THE WEST BAY SANITARY DISTRICT ON-SITE WASTEWATER DISPOSAL ZONE

Lands of Lee

The District Board of West Bay Sanitary District finds and determines as follows:

A. This Resolution of Intention is adopted pursuant to the District's "Zone Master Annexation Resolution" ("ZOMAR"), which was adopted by the District Board August 12, 1996. The provisions of ZOMAR are incorporated by reference into this Resolution of Intention.

B. The District has received an application to annex a parcel of real property (the "Parcel") to the District's On-Site Wastewater Disposal Zone (the "Zone"). The Parcel is described in Exhibit "A" attached to this Resolution of Intention and the description contained in the Exhibits are incorporated by reference. The name and address of the applicants and the number, type, volume and location of on-site wastewater disposal systems which are proposed to operate on the parcels to be annexed are described in Exhibit "B" attached to this Resolution of Intention and the information contained in the Exhibit are incorporated by reference.

C. The applicants have demonstrated to the satisfaction of the District Board that the Parcel constitutes "real property" for the purposes of Section 2(b) of ZOMAR in that:

☒ All of the conditions described in Subsections i., ii., iii., iv. and v. of ZOMAR Section 2(b) are satisfied; or

☐ Other conditions exist which demonstrate that the Parcel will benefit directly or indirectly from the activities of the Zone. If applicable, those conditions are also set forth in Exhibit "B" and are incorporated by reference.

D. All of the conditions and requirements of ZOMAR Sections 2(a), 2(c), 2(d) and 2(e) have been fully satisfied.

In consideration of the foregoing findings and determinations,

IT IS RESOLVED by the District Board as follows:

1. It is the intention of the District Board to annex the Parcel to the Zone pursuant to the provisions of ZOMAR and applicable provisions of law.

2. In conjunction with a meeting of the District Board to be duly and regularly called and conducted, the Board will conduct a Public Hearing for the purpose of considering all matters pertaining to this Resolution of Intention.

The time, date and place of the Public Hearing are:

Date: September 11, 2019
Time: 7:00 PM
Place: West Bay Sanitary District Offices
500 Laurel Street
Menlo Park, CA 94025

At the Public Hearing, all interested persons will be heard.

3. This Resolution of Intention shall be published and copies shall be delivered to the persons and entities as specified in ZOMAR Section 2(e)(i.).

4. A true copy of this Resolution of Intention shall promptly be filed for record in the office of the County Recorder of the County of San Mateo.

5. The District Manager shall cause the matters set forth in Sections 3 and 4 of this Resolution of Intention to be completed as directed.

******

Passed and adopted by the District Board of the West Bay Sanitary District at a special meeting thereof held on the 17th day of July, 2019 by the following vote:

AYES:

NOES:

ABSTAIN:

ABSENT:

_____
President of the District Board of the
West Bay Sanitary District of San Mateo
County, State of California

Attest:

_____
Secretary of the District Board of the
West Bay Sanitary District of San Mateo
County, State of California

2018-013606 CONF
11:00 am 02/27/18 CCL Fee: NO FEE
Count of pages 8
Recorded in Official Records
County of San Mateo
Mark Church
Assessor-County Clerk-Recorder
* $ R 0 0 0 2 5 2 3 6 4 3 $ *

SAN MATEO LAFCo
LOCAL AGENCY FORMATI
455 COUNTY CENTER, 2ND FLOOR • REDWOOD CITY, CA 94063-166

CERTIFICATE OF COMPLETION

Pursuant to Government Code Section 57200, this Certificate is issued by the Executive Officer of the Local Agency Formation Commission of San Mateo County, California.

1. The short-form designation, as determined by LAFCo, is Annexation of 30 Holden Court/ APN 079-092-150 to the West Bay Sanitary District.

2. The name of each district or city involved in this change of organization or reorganization and the kind or type of change of organization ordered for each city or district are as follows:

City or District	Type of Change of Organization
West Bay Sanitary District	Annexation

3. The above-listed cities and/or districts are located within the following counties: San Mateo County only.

4. A description of the boundaries of the above-cited change of organization or reorganization is shown on the attached map, marked Exhibit A and by reference incorporated herein.

5. The territory involved in this change of organization or reorganization is uninhabited.

6. This change of organization has been approved subject to the following terms and conditions, if any: None.

7. The resolution confirming this change of organization was adopted on January 17, 2018 by LAFCo, is marked Exhibit B, and by reference incorporated herein.

I hereby certify that I have examined the above-cited resolution, including any terms and conditions, and the map description and have found these documents to be in compliance with Resolution 1223, adopted on January 17, 2018.

Dated: February 26, 2018

Martha Poyatos
Executive Officer

COMMISSIONERS: MIKE O'NEILL, CHAIR, City • ANN DRAPER, VICE CHAIR, Public • JOSHUA COSGROVE, Special District • RICH GARBARINO, City DON HORSLEY, County • JOE SHERIDAN, Special District • WARREN SLOCUM, County
ALTERNATES: KATI MARTIN, Special District • HARVEY RARBACK, City • SEPI RICHARDSON, Public • DAVE PINE, County
STAFF: MARTHA POYATOS, EXECUTIVE OFFICER • REBECCA ARCHER, LEGAL COUNSEL • JEAN BROOK, COMMISSION CLERK

APPROVED
SAN MATEO LOCAL AGENCY
FORMATION COMMISSION
455 COUNTY CENTER
REDWOOD CITY, CA 94063

EXHIBIT B PAGE 1 OF 3

LAFCo File No. 17-18

RESOLUTION NO. 1223

RESOLUTION OF THE LOCAL AGENCY FORMATION COMMISSION
OF THE COUNTY OF SAN MATEO
MAKING DETERMINATIONS, APPROVING LAFCO FILE 17-18–
ANNEXATION OF 30 HOLDEN COURT
TO WEST BAY SANITARY DISTRICT
AND SUBSEQUENT ANNEXATION TO
THE ON-SITE WASTEWATER DISPOSAL ZONE,
WAIVING CONDUCTING AUTHORITY PROCEEDINGS,
AND ORDERING SAID ANNEXATION

RESOLVED, by the Local Agency Formation Commission of the County of San Mateo, State of California, that

WHEREAS, a proposal for the annexation of certain territory to the West Bay Sanitary District and subsequent annexation to the On-site Wastewater Disposal Zone in the County of San Mateo was heretofore filed with the Executive Officer of this Local Agency Formation Commission pursuant to Title 5, Division 3, commencing with Section 56000 of the Government Code; and

WHEREAS, the Executive Officer has reviewed the proposal and prepared a report, including her recommendations thereon, the proposal and report having been presented to and considered by this Commission; and

WHEREAS, it appears to the satisfaction of this Commission that all owners of the land included in the proposal consent to the proceeding; and

WHEREAS, a public hearing by this Commission was held on the proposal and at the hearing, this Commission heard and received all oral and written protests, objections, and evidence which were made, presented, or filed, and all persons present were given an opportunity to hear and be heard with respect to the proposal and the Executive Officer's report; and

WHEREAS, the Commission has waived conducting authority proceedings pursuant to Government Code Section 56663(c);

NOW, THEREFORE, the Local Agency Formation Commission of the County of San Mateo DOES HEREBY RESOLVE, DETERMINE AND ORDER as follows:

Section 1. This proposal is approved, subject to the following conditions: Submission of map and legal description as required by the State Board of Equalization.

Section 2. The boundaries as set forth in the application are hereby approved as submitted and are as described in Exhibit "A" attached hereto and by this reference incorporated herein.

Section 3. The territory consists of 1.27 acres, is found to be uninhabited, and is assigned the following distinctive short-form designation: Annexation of 30 Holden Court (APN 079-092-150), Portola Valley, to West Bay Sanitary District.

Section 4. The territory will be annexed to the On-site Wastewater Disposal Zone subsequent to annexation to West Bay Sanitary District.

Section 5. Conducting authority proceedings are hereby waived in accordance with Government Code Section 56663(c) and this annexation is hereby ordered.

APPROVED
SAN MATEO LOCAL AGENCY
FORMATION COMMISSION
455 COUNTY CENTER
REDWOOD CITY, CA 94063
EXHIBIT B PAGE 2 OF 3

Regularly passed and adopted this 17th day of January, 2018.

Ayes and in favor of said resolution:

APPROVED
SAN MATEO LOCAL AGENCY
FORMATION COMMISSION
455 COUNTY CENTER
REDWOOD CITY, CA 94063
EXHIBIT B PAGE 3 OF 3

Commissioners: Don Horsley
Harvey Rarback
Joe Sheridan
Warren Slocum
Ann Draper, Vice Chair

Noes and against said resolution:

Commissioner(s): None.

Commissioners Absent and/or Abstentions:

Commissioner(s): Joshua Cosgrove, Rich Garbarino, Mike O'Neill, Chair

Vice Chair
Local Agency Formation Commission
County of San Mateo
State of California

ATTEST:

Martha Poyatos
Executive Officer
Local Agency Formation Commission

Date: Jan. 17, 2018

I certify that this is a true and correct copy of the resolution above set forth.

Jean Brook
Clerk to the Commission
Local Agency Formation Commission

Date: 1-17-2018

WEST BAY SANITARY DISTRICT
(30 HOLDEN COURT)

LEGEND:

- EXISTING WEST BAY SANITARY DISTRICT BOUNDARY
- LANDS OF LEE & PROPOSED WEST BAY SANITARY DISTRICT BOUNDARY
- ADJACENT PROPERTY LINE

DISCLAIMER:
FOR ASSESSMENT PURPOSES ONLY. THIS DESCRIPTION OF LAND IS NOT A LEGAL PROPERTY DESCRIPTION AS DEFINED IN THE SUBDIVISION MAP ACT AND MAY NOT BE USED AS THE BASIS FOR AN OFFER FOR SALE OF THE LAND DESCRIBED.

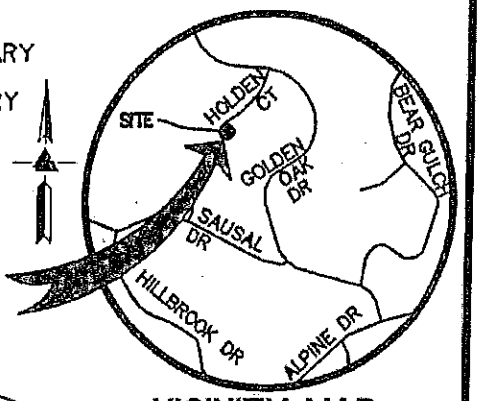

VICINITY MAP
NO SCALE

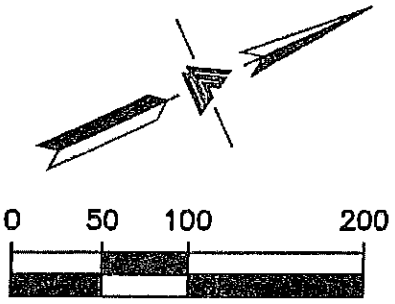

SCALE: 1" = 100'

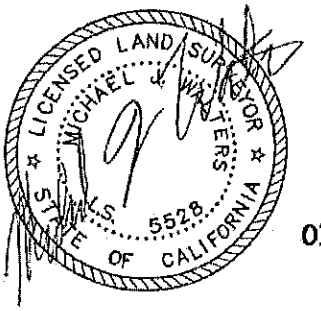

N22°55'37"E
87.72'
N70°13'14"W
280.00'
N75°26'32"E
306.11'
LANDS OF TIDWELL
APN: 079-092-160
LANDS OF WILLIAM A. LEE 2016 TRUST
DOC. NO. 2016-059790 O.R.
R=40.00'
L=67.94'
Δ=97°19'19"
S24°45'40"W
217.46'
N65°00'00"W
(RADIAL)
HOLDEN COURT
TRUE POINT OF BEGINNING
N70°13'14"W
130.52'
LANDS OF OLIVER
APN: 079-092-140
POINT OF COMMENCEMENT
RESOLUTION NO. 783
RESOLUTION NO. 931
APPROVED
SAN MATEO LOCAL AGENCY FORMATION COMMISSION
455 COUNTY CENTER
REDWOOD CITY, CA 94063
LANDS OF BANMAN
APN: 079-092-380
EXHIBIT A PAGE 1 OF 3
LANDS OF SAYER
APN: 079-092-070
LANDS OF LOZANO
APN: 079-092-410
RESOLUTION NO. 729
LANDS OF GOULD
APN: 079-092-470

LEA & BRAZE ENGINEERING, INC.
CIVIL ENGINEERS · LAND SURVEYORS
BAY AREA REGION
2495 INDUSTRIAL PKWY WEST
HAYWARD, CALIFORNIA 94545
(P) (510) 887-4086
(F) (510) 887-3019
SACRAMENTO REGION
3017 DOUGLAS BLVD, # 300
ROSEVILLE, CA 95661
(P) (916)966-1338
(F) (916)797-7363
WWW.LEABRAZE.COM

EXHIBIT "B"
PLAT TO ACCOMPANY LEGAL DESCRIPTION
PROPOSED SEWER ANNEXATION
LANDS OF WILLIAM A. LEE 2016 TRUST
TOWN OF OF PORTOLA VALLEY,
SAN MATEO COUNTY, CALIFORNIA

CHECKED BY: MJW DRAWN BY: WJH 2161266 FEBRUARY 2018

"EXHIBIT A"

DATE: 02-13-18
ANNEXED TO: WEST BAY SANITARY DISTRICT
NAME OF ANNEXATION: WEST BAY SANITARY DISTRICT

GEOGRAPHIC DESCRIPTION
LANDS OF WILLIAM A. LEE 2016 TRUST
PROPOSED ANNEXATION

ALL THAT REAL PROPERTY IN THE TOWN OF PORTOLA VALLEY, COUNTY OF SAN MATEO, STATE OF CALIFORNIA BEING PORTIONS OF LOTS 14 AND 15 IN BLOCK 4 AS SAID LOTS ARE SHOWN ON THAT CERTAIN MAP ENTITLED "TRACT NO. 695 ALPINE HILLS", FILED IN THE OFFICE OF THE COUNTY RECORDER OF SAN MATEO COUNTY ON SEPTEMBER 28, 1954 IN BOOK 40 OF MAPS AT PAGES 15-17 AS LAND IS DESCRIBED IN CERTAIN DEED FILED JUNE 20, 2016 AS DOCUMENT NO. 2016-059790 AND MORE PARTICULARLY DESCRIBED AS FOLLOWS:

COMMENCING AT THE MOST SOUTHWESTERLY CORNER OF SAID LOT 14, AS LOT IS SHOWN ON SAID MAP; THENCE ALONG THE SOUTHERLY LINE OF SAID LOT 14, NORTH 70°13'14" WEST 130.52 FEET TO THE **TRUE POINT OF BEGINNING**; THENCE CONTINUING ALONG THE SOUTHERLY LINE OF SAID LOTS 14 AND 15, NORTH 70°13'14" WEST 280.00 FEET TO THE MOST SOUTHWESTERLY CORNER OF SAID LOT 15; THENCE ALONG THE WESTERLY LINE OF SAID LOT 15, NORTH 22°55'37" EAST 87.72 FEET; THENCE LEAVING SAID WESTERLY LINE OF SAID LOT 15, NORTH 75°26'32" EAST 306.11 FEET TO THE RIGHT OF WAY LINE AT THE CUL-DE-SAC OF HOLDEN COURT, AS RIGHT OF WAY IS SHOWN ON SAID MAP, SAID POINT BEING A POINT ON A CURVE, CONCAVE EASTERLY, HAVING A CENTRAL ANGLE OF 97°19'19", A RADIUS OF 40.00 FEET AND A RADIAL BEARING OF NORTH 65°00'00" WEST; THENCE SOUTHEASTERLY ALONG SAID CURVE 67.94 FEET; THENCE SOUTH 24°45'40" WEST 217.46 FEET TO THE **TRUE POINT OF BEGINNING.**

CONTAINING 1.180 ACRES, MORE OR LESS

FOR ASSESSMENT PURPOSES ONLY. THIS DESCRIPTION OF LAND IS NOT A LEGAL PROPERTY DESCRIPTION AS DEFINED IN THE SUBDIVISION MAP ACT AND MAY NOT BE USED AS THE BASIS FOR AN OFFER FOR SALE OF THE LAND DESCRIBED.

MICHAEL J. WALTERS PLS 5528

2-13-18
DATE

LICENSED LAND SURVEYOR
MICHAEL J. WALTERS
No. LS 5528
Exp ____
STATE OF CALIFORNIA

APPROVED
SAN MATEO LOCAL AGENCY
FORMATION COMMISSION
455 COUNTY CENTER
REDWOOD CITY, CA 94063

EXHIBIT A PAGE 2 OF 3

WEST BAY SANITARY DISTRICT
EXHIBIT "B"
SITE LOCATION
30 HOLDEN COURT
PORTOLA VALLEY, CA
SEPTIC TANK EFFLUENT PUMPING (STEP) SYSTEM

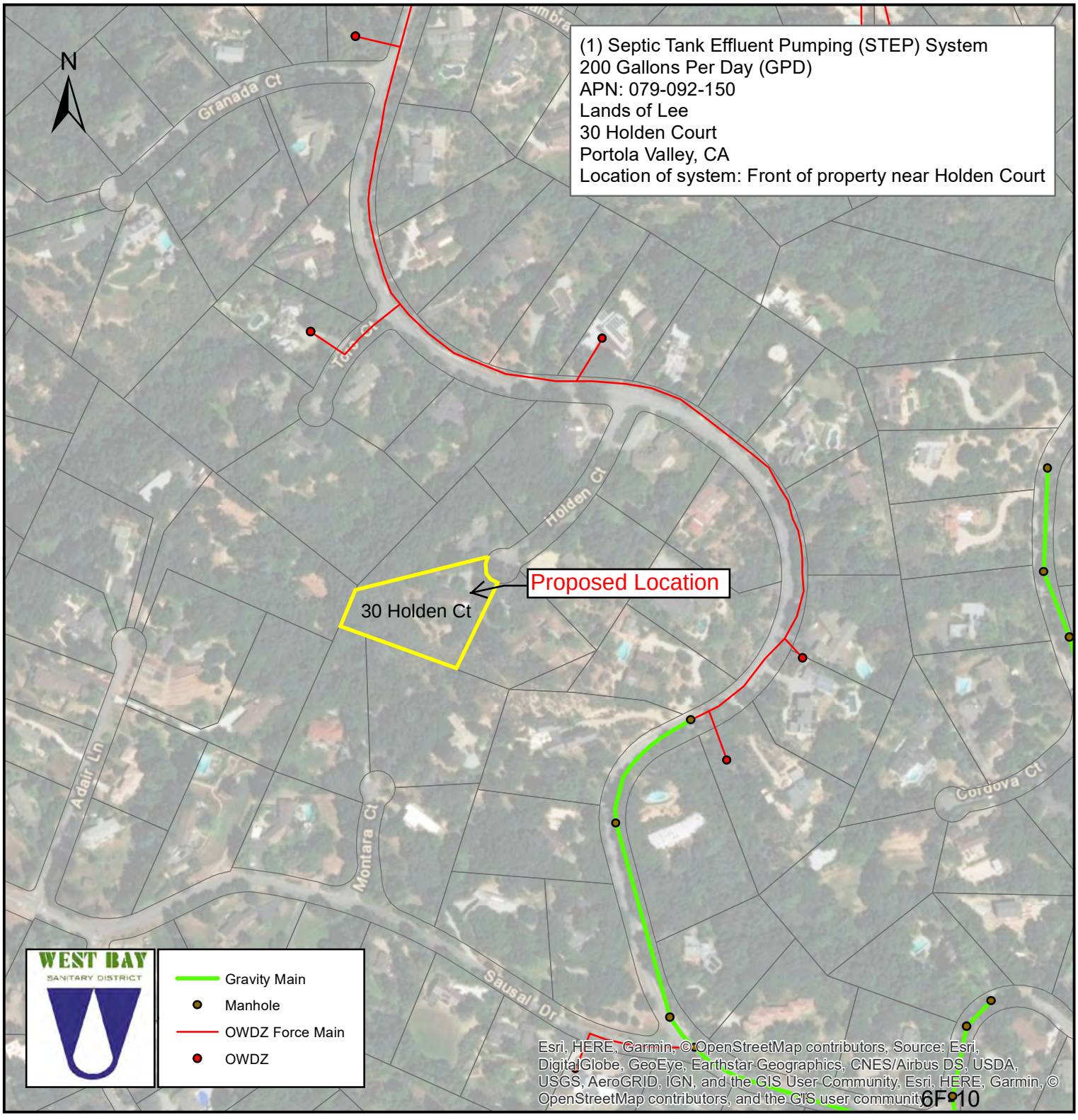

WEST BAY SANITARY DISTRICT
AGENDA ITEM 7

To: ***Board of Directors***

From: ***Phil Scott, District Manager***

Subject: ***Consider Approval of Resolution to Authorize the District Manager to Execute an Operations & Maintenance Agreement with State of California Through the Department of Transportation (Caltrans) for the Recycled Water Pipeline Within the State Right of Way***

Background

The District has been working with Caltrans to obtain an encroachment permit for the recycled water line and forcemain to run through their property at the 280 on/off ramp off Sand Hill Road. A variance is required since we are not simply crossing their right of way but running horizontally through the right of way for some considerable distance.

Conditions of obtaining a variance for this encroachment permit were to have in place a Water Use Agreement for a recycled water fill station in the median, which has been executed, and an Operations & Maintenance Agreement that indicates the District will be responsible for and maintain the pipelines that the District places within their right of way.

The District Board has discussed this in agenda updates in the past year but formal action is now required.

Analysis

To meet the Caltrans requirements and obtain an encroachment permit the Board must authorize the District Manager of the West Bay Sanitary District, to execute an O&M agreement with Caltrans by formal resolution. This approved and signed resolution, and certificate of insurance, must accompany the executed O&M agreement before Caltrans will grant the encroachment permit.

Failure to obtain the encroachment permit in a timely manner could result in significant cost increase to the job and possibly jeopardize the project.

Fiscal Impact

Although there is no direct fiscal impact of executing the agreement there will be a change order in the Design/Build contract to construct the turnout and the fill station. These costs will be funded through the State Revolving Loan. In addition, future

maintenance costs will be part of the O&M annual maintenance charges calculated to be paid by Sharon Heights Golf and Country Club.

Recommendation

The District Manager recommends the Board approve the resolution authorizing the District Manager to execute the attached O&M agreement with the State of California through the Department of Transportation (Caltrans) for the recycled water fill station and appurtenant recycled water pipelines, and provide a signed copy of the resolution to the State with the executed copy of the O&M agreement.

Attachments: Resolution

State of California DOT Maintenance Agreement

RESOLUTION NO. ____(2019)

RESOLUTION OF THE BOARD OF DIRECTORS OF THE WEST BAY SANITARY DISTRICT AUTHORIZING EXECUTION AND DELIVERY OF OPERATIONS AND MAINTENANCE AGREEMENT WITH THE STATE OF CALIFORNIA DEPARTMENT OF TRANSPORTATION (CALTRANS) FOR MAINTENANCE OF RECYCLED WATER PIPELINES AND FILL STATION WITHIN STATE RIGHT OF WAY IN THE PROXIMITY OF SAND HILL ROAD, MENLO PARK AND HIGHWAY 280

WHEREAS, in order to complete the current Recycled Water Project – Sharon Heights an encroachment permit through the State Right of Way near the Highway 280 onramp/exit off Sand Hill Road, for the installation of pipelines is necessary; and

WHEREAS, the District desires to install the pipelines in a horizontal easement located within an existing median in Sand Hill road, along with a recycled water distribution pipeline, communications conduit and filling station with separate pipelines, meters, valves, and filling connections for the District and State use on the east side of the median adjacent to the Highway 280 northbound exit at Sand Hill Road in Menlo Park, CA approximately located between 2900 Sand Hill Road and 2825 Sand Hill Road, Menlo Park; and

WHEREAS, a variance to the encroachment permit is required since the District is not simply crossing the State right of way but running horizontally through the right of way for some considerable distance; and

WHEREAS, conditions of obtaining a variance for this encroachment permit were to have in place a Water Use Agreement for a recycled water fill station in the median, which has been executed, and an Operations & Maintenance Agreement that indicates the District will be responsible for and maintain the pipelines that the District places within their right of way; and

WHEREAS, having an executed Operations and Maintenance Agreement seems to be the last step in successfully obtaining an encroachment permit from the State for this recycled water project; and

WHEREAS, the additional costs of the fill station and turnout will be included in the State Revolving Fund loan; and

WHEREAS, pursuant to the Long Term Agreement with Sharon Heights Golf and Country Club the Club will be responsible for the future Maintenance costs; and

WHEREAS, the Board of Directors of the District wishes to approve the Operations and Maintenance Agreement in furtherance of the public purposes of the District;

NOW, THEREFORE, BE IT RESOLVED by the Board of Directors of the West Bay Sanitary District as follows:

Section 1. Approval of Operations and Maintenance Agreement. That certain agreement entitled “Operation and Maintenance Agreement,” between the

District and the State of California through its Department of Transportation (Caltrans), is hereby approved substantially in the form of the copy thereof attached, to which copy reference is hereby made for the full particulars thereof, and the District Manager is hereby authorized and directed to execute said agreement and to attest thereto, respectively, for and on behalf of the District.

Section 2. Official Actions. The District Manager is hereby authorized and directed to execute or attest thereto, any and all certificates of insurance, drawings, and other engineering documents, necessary or appropriate to effectuate the purposes of the Operations and Maintenance Agreement and the issuance of the encroachment permit by the State.

Section 3. Effective Date. This Resolution shall take effect immediately upon its passage and adoption.

* * * * * * * *

I hereby certify that the foregoing Resolution was passed and adopted by the Board of Directors of the West Bay Sanitary District at a special meeting thereof duly held on July 17, 2019, by the following votes:

Ayes:

Noes:

Abstain:

Absent:

_____
President of the District Board of the West Bay Sanitary District of San Mateo County, State of California

Attest:

_____
Secretary of the District Board of the West Bay Sanitary District of San Mateo County, State of California

OPERATIONS AND MAINTENANCE AGREEMENT WITH WEST BAY SANITARY DISTRICT FOR SEWER AND RECYCLED WATER TRANSMISSION FACILITIES AND A RECYCLED WATER FILLING STATION ON MEDIAN – SAND HILL ROAD, MENLO PARK, CALIFORNIA

THIS AGREEMENT, entered into, and effective on the _____day of _____, 2019, is between the State of California, acting by and through its Department of Transportation, referred to herein as "STATE," and the West Bay Sanitary District, referred to herein as "WEST BAY." STATE and WEST BAY are together referred to herein as "PARTIES."

1. RECITALS

a. WEST BAY is a sanitary district organized and existing under the Sanitary District Act of 1923 (Cal. Health & Safety Code § 6400, et seq.) and providing sewer collection services in the Cities of Menlo Park, Atherton, Portola Valley, areas of East Palo Alto, Woodside and portions of unincorporated San Mateo and Santa Clara Counties.

b. WBSD is implementing the Recycled Water Project – Sharon Heights, as a two phase project involving the construction of satellite treatment facility designed to treat a max day flow of 0.5 Million Gallons a Day (MGD), a wastewater pump station to divert flow to the treatment facility at Sharon Heights Golf and Country Club (SHGCC) via a transmission pipeline to be partially constructed in STATE right of way in Sand Hill Road ("Pipeline"), 1,580 linear-feet (LF) of pipeline to discharge solids to an existing sewer, and a recycled water distribution line to SHGCC and future customers and a filling station in a Sand Hill Road median as described below. The objective of the Project is to reduce the use of potable water by up to 60,000,000 gallons per year (152 acre-feet) by providing a new source of recycled water to the Sharon Heights area of Menlo Park including the SHGCC and additional nearby customers for irrigation use and/or industrial use.

c. WEST BAY desires to install the Pipeline in a horizontal easement located within an existing median in Sand Hill Road, along with a recycled water distribution pipeline, communications conduit and filling station with separate pipelines, meters, valves and filling connections for WEST BAY and STATE use (collectively the "FACILITIES") on the east side of the median adjacent to the Highway 280 northbound exit at Sand Hill Road in Menlo Park, CA approximately located between 2900 Sand Hill Road and 2825 Sand Hill Road, Menlo Park, California.

d. STATE seeks to employ practices consistent with Streets and Highways Code 92.3 to utilize recycled water from the FACILITIES to reduce dependency on potable water for maintenance and operations and erosion control purposes in accordance with all applicable rules, regulations, policies, and procedures; and

e. The PARTIES have separately negotiated a Recycled Water Use Agreement, setting forth financial and other arrangements whereby WEST BAY agrees to supply STATE with recycled water from the Project, along with Encroachment Permit No. _____.

f. The PARTIES mutually desire to allocate operating and maintenance responsibilities for FACILITIES, specifically the maintenance functions to be performed by WEST BAY, and to specify the terms and conditions under which such work will be performed.

2. AGREEMENT. In consideration of the mutual covenants and promises herein contained, it is agreed:

a. Exhibit "A", attached hereto and incorporated by reference, consists of plan drawings that delineate the FACILITIES to be constructed within the STATE right- of-way and indicates which of these FACILITIES will be the responsibility of the WEST BAY to maintain upon completion of construction and which shall be the responsibility of the STATE to maintain. Specifically, WEST BAY shall not maintain or operate the fill station dedicated for use by the STATE (Fill Station #1). When a planned future improvement has been constructed and/or a minor revision has been effected within the limits of the State Right of Way herein described, which affects the PARTIES division of maintenance, the STATE will provide a newly dated and revised Exhibit A, which, when executed as a formal amendment by both parties, shall be made a part hereof by this reference to supersede the original exhibit as part of this Agreement.

b. WEST BAY shall be responsible, including all costs related thereto, for operation, maintenance, protection, and repair of FACILITIES (except as indicated in Section 2. C. below). Said work at all times shall be conducted to ensure safety and convenience of State Highway users. Said work and FACILITIES shall be subject to random inspection by STATE. WEST BAY shall, upon notice from STATE that an unsafe condition exists, take immediate steps to correct such unsafe conditions. If WEST BAY fails to perform after such notice from STATE, STATE may take necessary corrective action, and WEST BAY shall pay all reasonable costs for such corrective work performed by STATE. WEST BAY's obligation to pay for the costs of such corrective work shall not apply if the unsafe condition is caused by STATE. Such inspection by STATE, if performed at all, does not relieve WEST BAY of its responsibilities under this Agreement.

c. WEST BAY shall maintain FACILITIES (with the exception of the STATE filling station #1) in good condition and repair at all times, and as further set forth herein.

d. Under this Agreement, WEST BAY is restricted to maintenance and operation of the FACILITIES, except as previously delineated in Section 2.c. above. "Facilities Operation", (as used herein), shall include providing access to the West Bay filling station (Fill Station #2) to third-party contractors pursuant to a West-Bay issued permit. Any other use or presence by WEST BAY or WEST BAY's authorized contractors by Encroachment Permit No._____ will require that a separate encroachment permit be issued to that party from STATE.

e. WEST BAY shall not use, without a separate encroachment permit issued by STATE, FACILITIES in any manner that will interfere with or impair the primary use of FACILITIES as a recycled water fill station.

f. STATE reserves its right to use those areas within STATE's right-of-way occupied by FACILITIES for future construction, reconstruction, expansion, modification, or

maintenance purposes without restriction or reimbursement to any party.

g. An encroachment permit from the STATE will be required for third parties if WEST BAY contracts out the maintenance of FACILITIES to a contractor. Said contractor(s) shall be subject to the same inspections and responsibilities as specified herein for work that would otherwise be performed directly by WEST BAY.

h. WEST BAY shall not erect signs of any kind within FACILITIES, except such signs as may be necessary in connection with the operation of the FACILITIES, including permitted advertising signs, or that are otherwise required by law. Such signs shall not be attached to or painted on any STATE freeway structures or facilities within STATE Right of Way - except by prior written consent of STATE.

i. STATE, at its sole discretion, may provide WEST BAY with 30 days advance notification for STATE's maintenance work or 60 days advance notification for STATE's construction work affecting FACILITIES.

3. MAINTENANCE DEFINED

   a. Maintenance is defined in Section 27 of the Streets and Highway Code.

4. MAINTENANCE FUNCTIONS. Maintenance functions of the FACILITIES are at WEST BAY's sole expense, unless otherwise specified, and are as follows:

   a. PAVEMENT MAINTENANCE. WEST BAY shall be responsible for pavement maintenance of the Filling Station turnout area only, such as pothole repair, sweeping, and debris removal of the paved surface when necessary.

   b. WEST BAY shall be responsible for maintaining areas designated in Exhibit A in a condition free of litter, debris (including all broken glass), and graffiti.

   c. WEST BAY shall be responsible for the maintenance and the installation of signage necessary for the direction and operation of the FACILITIES.

   d. WEST BAY shall be responsible for the maintenance, repair, replacement, and cleaning of safety devices located within the FACILITIES, if any, including gates, fences, railing, guardrails, and markers.

   e. WEST BAY shall be responsible for maintenance, repair, testing and replacement of the FACILITIES including pipelines, valves force mans, water meter, water meter box, communication lines and any fill station dedicated for use by WEST BAY and its contractors. WEST BAY shall not operate or maintain the fill station dedicated for use by STATE. When and if such maintenance activities require excavation that will disturb paving, WEST BAY shall replace paving in kind.

5. LEGAL RESPONSIBILITIES:

   a. Nothing in the provisions of this Agreement is intended to create duties or obligations to

or rights in third parties not party to this Agreement or affect the legal liability of any party to the Agreement by imposing any standard of care with respect to the maintenance of State highways different from the standard of care imposed by law.

b. Neither STATE nor any officer or employee thereof is responsible for any injury, damage or liability occurring by reason of anything done or omitted to be done by WEST BAY under or in connection with any work, authority or jurisdiction expressly conferred upon WEST BAY under this Agreement and arising by this Agreement. It is understood and agreed that, WEST BAY will fully defend, indemnify, and save harmless STATE and all of its officers and employees from all claims, suits or actions of every name, kind and description brought forth under, including, but not limited to, tortious, contractual, inverse condemnation or other theories or assertions of liability occurring by reason of anything done or omitted to be done by WEST BAY under or in connection with any work expressly conferred upon WEST BAY by this Agreement.

c. Neither WEST BAY nor any officer or employee thereof is responsible for any injury, damage or liability occurring by reason of anything done or omitted to be done by STATE under or in connection with any work, authority or jurisdiction expressly conferred upon STATE under this Agreement. It is understood and agreed that, STATE will fully defend, indemnify, and save harmless WEST BAY, and respective officers and employees thereof, from all claims, suits or actions of every name, kind and description brought forth under, including, but not limited to, tortious, contractual, inverse condemnation or other theories or assertions of liability occurring by reason of anything done or omitted to be done by STATE under or in connection with any work expressly conferred upon STATE by this Agreement with the exception of those actions of STATE necessary to cure a noticed default on the part of WEST BAY.

6. LABOR CODE COMPLIANCE: PREVAILING WAGES

a. If the work performed under this agreement is done under contract and falls within the Labor Code Section 1720(a)(1) definition of a "public work" in that it is construction, alteration, demolition, installation, or repair; or maintenance work under Labor Code 1771, WEST BAY must conform to the provisions of Labor Code Sections 1720 through 1815, and all applicable provisions of California Code of Regulations found in Title 8, Chapter 8, Subchapter 3, Articles 1-7. WEST BAY agrees to include prevailing wage requirements in its contracts for public work. Work performed by WEST BAY's own forces is exempt from the Labor Code's Prevailing Wage requirements.

b. WEST BAY shall require its contractors to include prevailing wage requirements in all subcontracts funded by this Agreement when the work to be performed by the subcontractor is a "public work" as defined in Labor Code Section 1720(a)(1) and Labor Code Section 1771. Subcontracts shall include all prevailing wage requirements set forth in WEST BAY's contracts.

7. INSURANCE

a. WEST BAY and its contractors shall maintain in force, during the term of this agreement, a policy of general liability insurance, including coverage of bodily injury liability and

property damage liability, naming the STATE, its officers, agents and employees as the additional insured in an amount of $1 million per occurrence and $2 million in aggregate and $5 million in excess. Coverage shall be evidenced by a certificate of insurance in a form satisfactory to the STATE that shall be delivered to the STATE with a signed copy of this Agreement.

b. If the work performed under this Agreement is done by WEST BAY's contractor(s), WEST BAY shall require its contractor(s) to maintain in force, during the term of this agreement, a policy of general liability insurance, including coverage of bodily injury liability and property damage liability, naming the STATE, its officers, agents and employees as the additional insured in an amount of $1 million per occurrence and $2 million in aggregate and $5 million in excess. Coverage shall be evidenced by a certificate of insurance in a form satisfactory to the STATE and shall be delivered to the STATE with a signed copy of this Agreement.

8. TERMINATION - This Agreement may be terminated by mutual written consent by PARTIES, and WEST BAY's failure to comply with the provisions of this Agreement may be grounds for a Notice of Termination by STATE.

9. EFFECTIVE DATE AND RIGHT TO TERMINATE. This Agreement shall be effective once fully executed by both PARTIES and shall remain in full force and effect until amended or terminated at any time upon mutual consent of the PARTIES or until terminated by STATE for cause or convenience ("Convenience" to include, but not be limited to, State's desire to use Right of Way for other purposes). Upon termination of this Agreement, WEST BAY shall, at WEST BAY's expense, return FACILITIES to a condition equivalent to the condition existing prior to the execution of this Agreement, or to a condition acceptable to STATE.

The PARTIES are empowered by Street and Highways Code sections 114 and 130 to enter into this Agreement and has delegated to the undersigned the authority to execute this Agreement on behalf of the respective agencies and covenants to have followed all the necessary legal requirements to validly execute this Agreement.

IN WITNESS WHEREOF, the parties hereto have set their hands and seals the day and year first above written.

WEST BAY SANITARY DISTRICT

By: _____
Phil Scott, District Manager

Dated: _____

Approved as to Form:

By: _____
District Legal Counsel

STATE OF CALIFORNIA
DEPARTMENT OF TRANSPORTATION

LAURIE BERMAN
Director of Transportation

By: _____
David Ambuehl Date
District 4 - Deputy District Director
Maintenance

As to Form and Procedure:

By: _____
Attorney
Department of Transportation

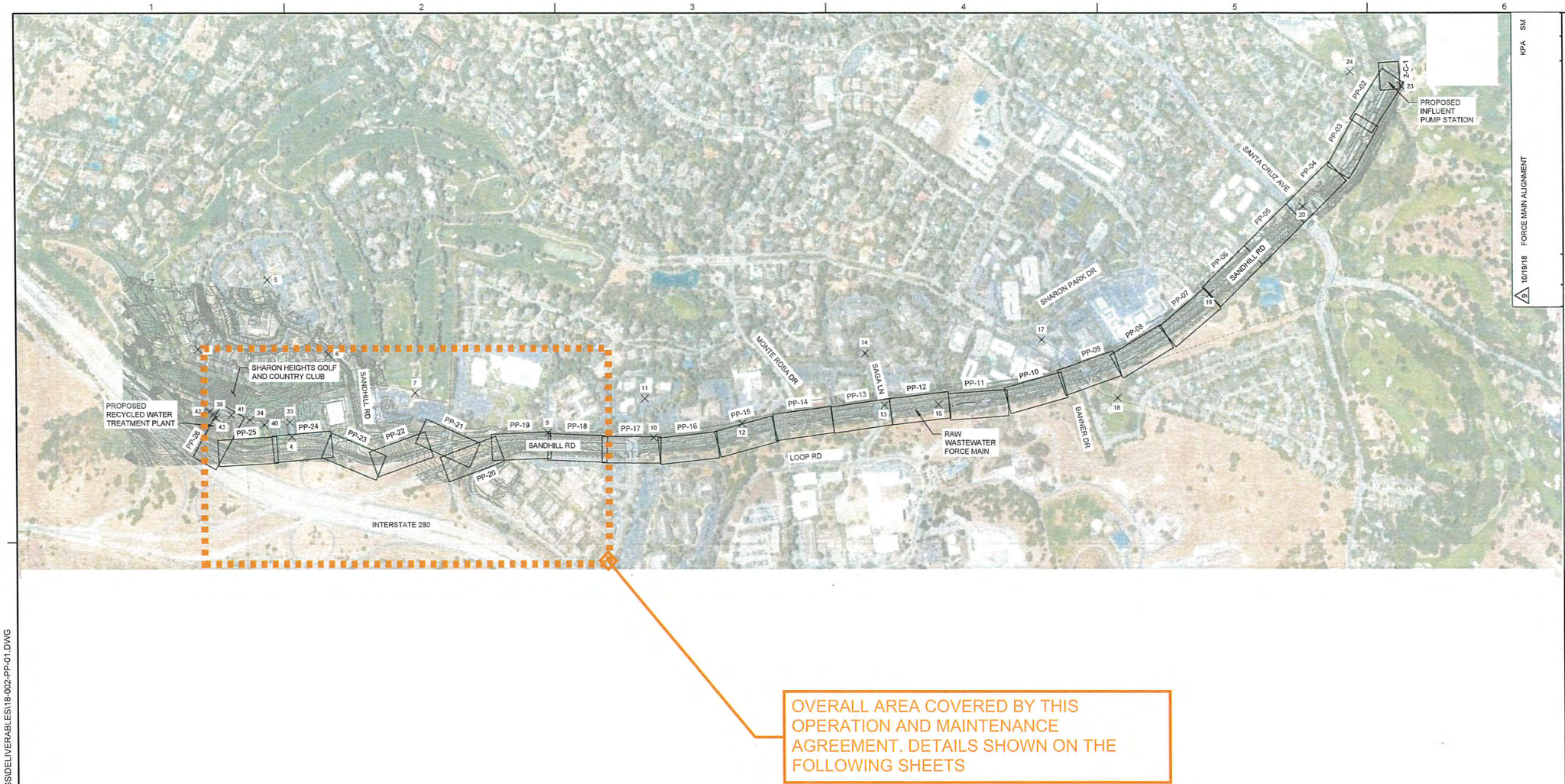

Q:\PROJECTS\18-002 SHARON HEIGHTS GOLF CLUB WRF\DRAWINGS\DELIVERABLES\18-002-PP-01.DWG

9 10/19/18 FORCE MAIN ALIGNMENT KPA SM

WEST BAY SANITARY DISTRICT OPERATIONS AND MAINTENANCE AGREEMENT

EXHIBIT A

PAGE 1 OF 11

PLAN AND PROFILE

FORCEMAIN PLAN AND PROFILE INDEX PLAN

DRAWING NUMBER PP-01

JOB NUMBER: 18-002 FILENAME: 18-002-PP-01.DWG PLOT DATE: 05/29/19 PLOT TIME: 15:29:00

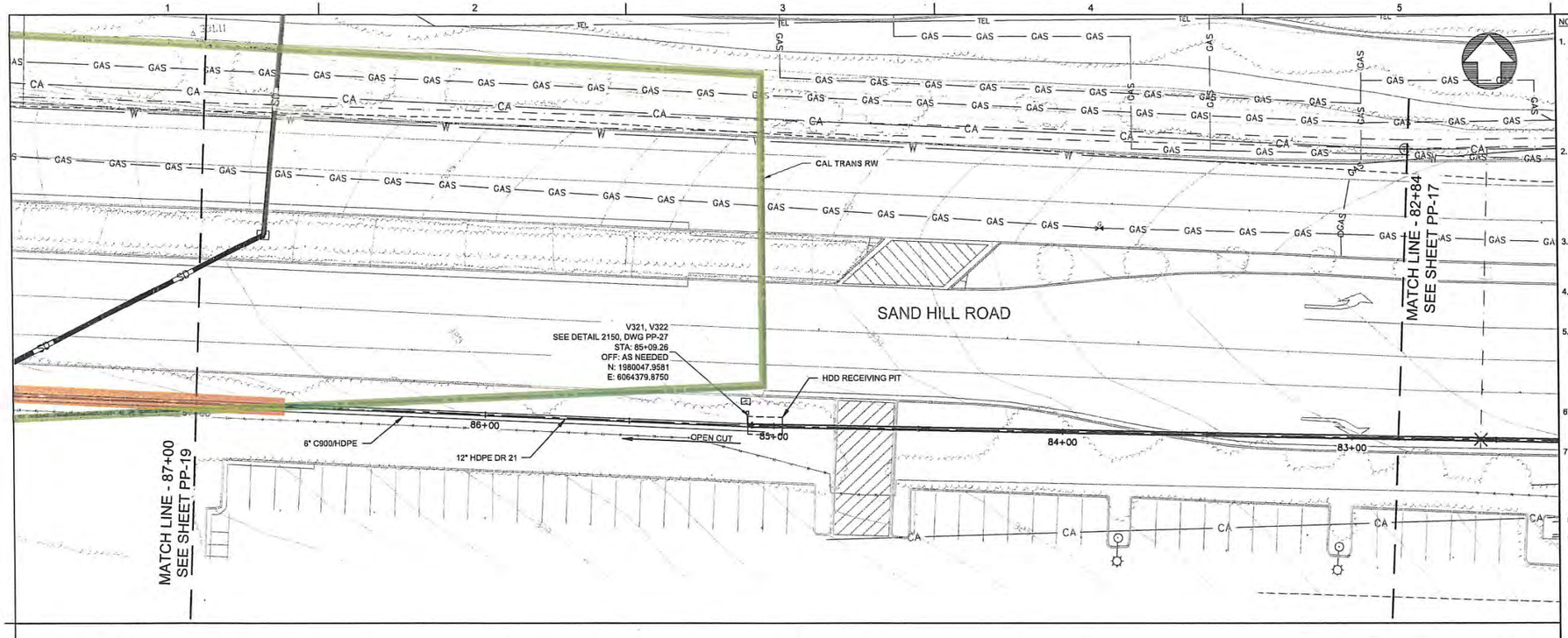

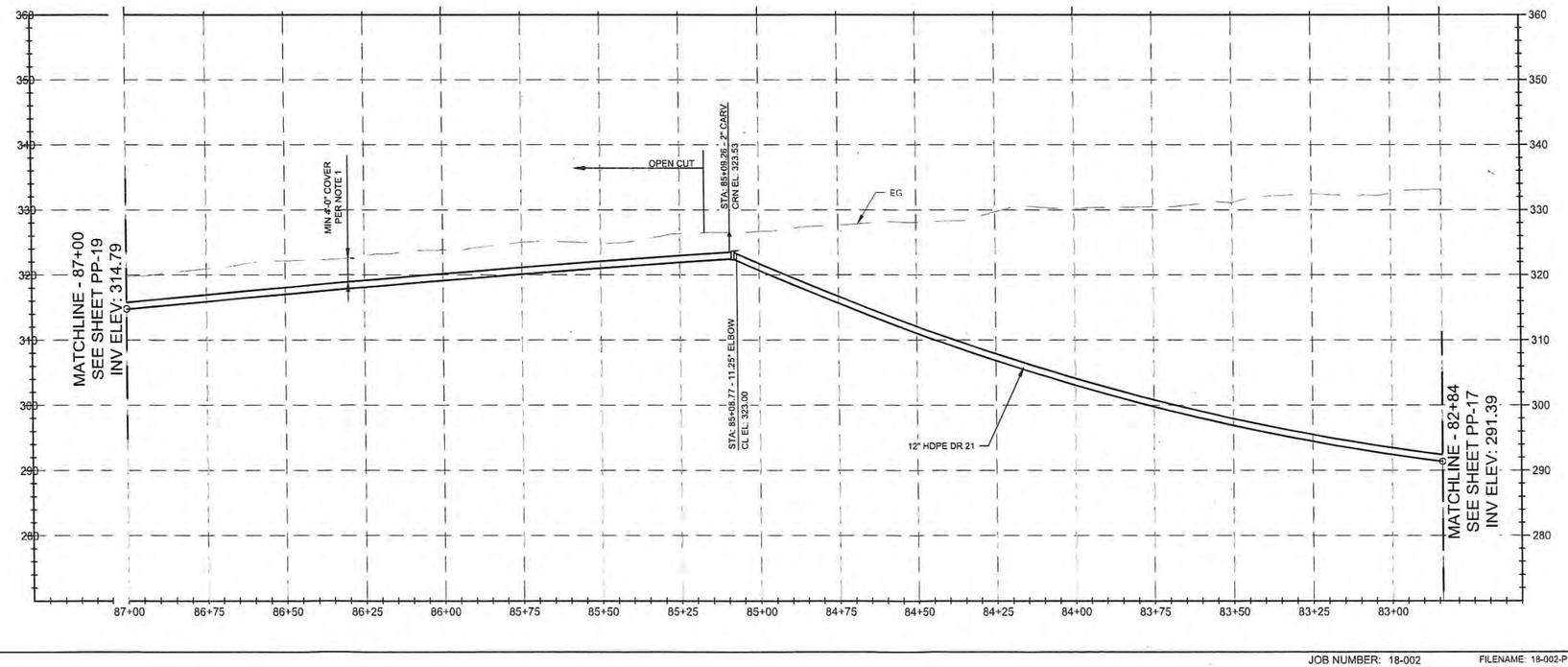

NOTES:

1. COVER FOR BURIED PIPE IS 4'-0" MIN IN PAVED AREAS, PER WBSD DETAIL 8, UNLESS OTHERWISE NOTED. IN UNPAVED AREAS, 3'-0" COVER IS REQUIRED PER DETAIL 2 ON DWG PP-27, UNLESS OTHERWISE NOTED. REPLACE TRENCH BACKFILL MATERIAL WITH CLSM IF BURIED PIPE COVER IS LESS THAN MIN.
2. DESIGN PIPES SHOWN MINIMIZE HIGH POINTS AND MAINTAIN 4'-0" MIN. COVER. CONTRACTOR MAY DEVIATE PROVIDED THAT 4'-0" MIN. COVER IS MAINTAINED AND NO ADDITIONAL HIGH POINTS ARE ADDED. NO ZERO PIPE SLOPES ARE ALLOWED.
3. CONTRACTOR SHALL MAINTAIN ACCESS FOR ALL LOCAL RESIDENTS AT ALL TIMES DURING CONSTRUCTION.
4. CONTRACTOR SHALL MAINTAIN UTILITY SERVICES UNDISRUPTED TO HOMEOWNERS AT ALL TIMES.
5. CONTRACTOR SHALL VERIFY POINT OF CONNECTION PRIOR TO CONSTRUCTION. LOCATIONS SHOWN ARE BEST REPRESENTATION BASED ON FIELD VISITS AND AS-BUILT DRAWINGS.
6. 12" MIN. CLEARANCE FROM OTHER UTILITIES UNLESS OTHERWISE NOTED.
7. THE WATER MAIN SHOULD HAVE NO JOINTS WITHIN 8 FEET FROM EITHER SIDE OF A STORM DRAIN OR SEWER LINE AT NO LESS THAN 45°.

ARBORIST NOTES:

1. TREES SHOWN ON DRAWING TO BE PROTECTED AS INDICATED IN ARBORIST TREE PROTECTION PLAN . EXTEND PROTECTION A MINIMUM OF 2' EITHER SIDE OF TRUNK. FOR CLUSTER OF TREES, PROTECT CONTINUOUSLY PAST END TREE PLUS 2'.

LEGEND

CALTRANS RIGHT OF WAY LIMITS

INFRASTRUCTURE FOR WHICH WEST BAY SANITARY DISTRICT HAS MAINTENANCE RESPONSIBILITY

20 0 20 40 FEET
HORIZ SCALE 1"=20'

10 0 10 20 FEET
VERT SCALE 1"=10'

NO.	DATE	REVISION	BY	APVD
12	13/8/19	CALTRANS ENCROACHMENT PERMIT	KPA	SK
9	10/19/18	FORCE MAIN ALIGNMENT	KPA	SM

WEST BAY SANITARY DISTRICT OPERATIONS AND MAINTENANCE AGREEMENT

EXHIBIT A
PAGE 2 OF 11

PLAN AND PROFILE
STATION 82+84 TO 87+00

DRAWING NUMBER
PP-18

Q:\PROJECTS\18-002 SHARON HEIGHTS GOLF CLUB WRF\DRAWINGS\DELIVERABLES\18-002-PP-18.DWG

JOB NUMBER: 18-002 FILENAME: 18-002-PP-18.DWG PLOT DATE: 03/11/19 PLOT TIME: 13:58:27

NOTES:

1. COVER FOR BURIED PIPE IS 4'-0" MIN IN PAVED AREAS, PER WBSD DETAIL 8, UNLESS OTHERWISE NOTED. IN UNPAVED AREAS, 3'-0" COVER IS REQUIRED PER DETAIL 2 ON DWG PP-27, UNLESS OTHERWISE NOTED. REPLACE TRENCH BACKFILL MATERIAL WITH CLSM IF BURIED PIPE COVER IS LESS THAN MIN.
2. DESIGN PIPES SHOWN MINIMIZE HIGH POINTS AND MAINTAIN 4'-0" MIN. COVER. CONTRACTOR MAY DEVIATE PROVIDED THAT 4'-0" MIN. COVER IS MAINTAINED AND NO ADDITIONAL HIGH POINTS ARE ADDED. NO ZERO PIPE SLOPES ARE ALLOWED.
3. CONTRACTOR SHALL MAINTAIN ACCESS FOR ALL LOCAL RESIDENTS AT ALL TIMES DURING CONSTRUCTION.
4. CONTRACTOR SHALL MAINTAIN UTILITY SERVICES UNDISRUPTED TO HOMEOWNERS AT ALL TIMES.
5. CONTRACTOR SHALL VERIFY POINT OF CONNECTION PRIOR TO CONSTRUCTION. LOCATIONS SHOWN ARE BEST REPRESENTATION BASED ON FIELD VISITS AND AS-BUILT DRAWINGS.
6. 12" MIN. CLEARANCE FROM OTHER UTILITIES UNLESS OTHERWISE NOTED.
7. THE WATER MAIN SHOULD HAVE NO JOINTS WITHIN 8 FEET FROM EITHER SIDE OF A STORM DRAIN OR SEWER LINE AT NO LESS THAN 45°.

ARBORIST NOTES:

1. TREES SHOWN ON DRAWING TO BE PROTECTED AS INDICATED IN ARBORIST TREE PROTECTION PLAN . EXTEND PROTECTION A MINIMUM OF 2' EITHER SIDE OF TRUNK. FOR CLUSTER OF TREES, PROTECT CONTINUOUSLY PAST END TREE PLUS 2'.

LEGEND

CALTRANS RIGHT OF WAY LIMITS

INFRASTRUCTURE FOR WHICH WEST BAY SANITARY DISTRICT HAS MAINTENANCE RESPONSIBILITY

HORIZ SCALE 1"=20'

VERT SCALE 1"=10'

NO.	DATE	REVISION	BY	APVD
12	13/8/19	CALTRANS ENCROACHMENT PERMIT	KPA	SK
9	10/19/18	FORCE MAIN ALIGNMENT	KPA	SM

WEST BAY SANITARY DISTRICT OPERATIONS AND MAINTENANCE AGREEMENT

EXHIBIT A

PAGE 3 OF 11

PLAN AND PROFILE

STATION 87+00 TO 91+42

DRAWING NUMBER PP-19

JOB NUMBER: 18-002 FILENAME: 18-002-PP-19.DWG PLOT DATE: 03/11/19 PLOT TIME: 13:58:40

Q:\PROJECTS\18-002 SHARON HEIGHTS GOLF CLUB WRF\DRAWINGS\DELIVERABLES\18-002-PP-19.DWG

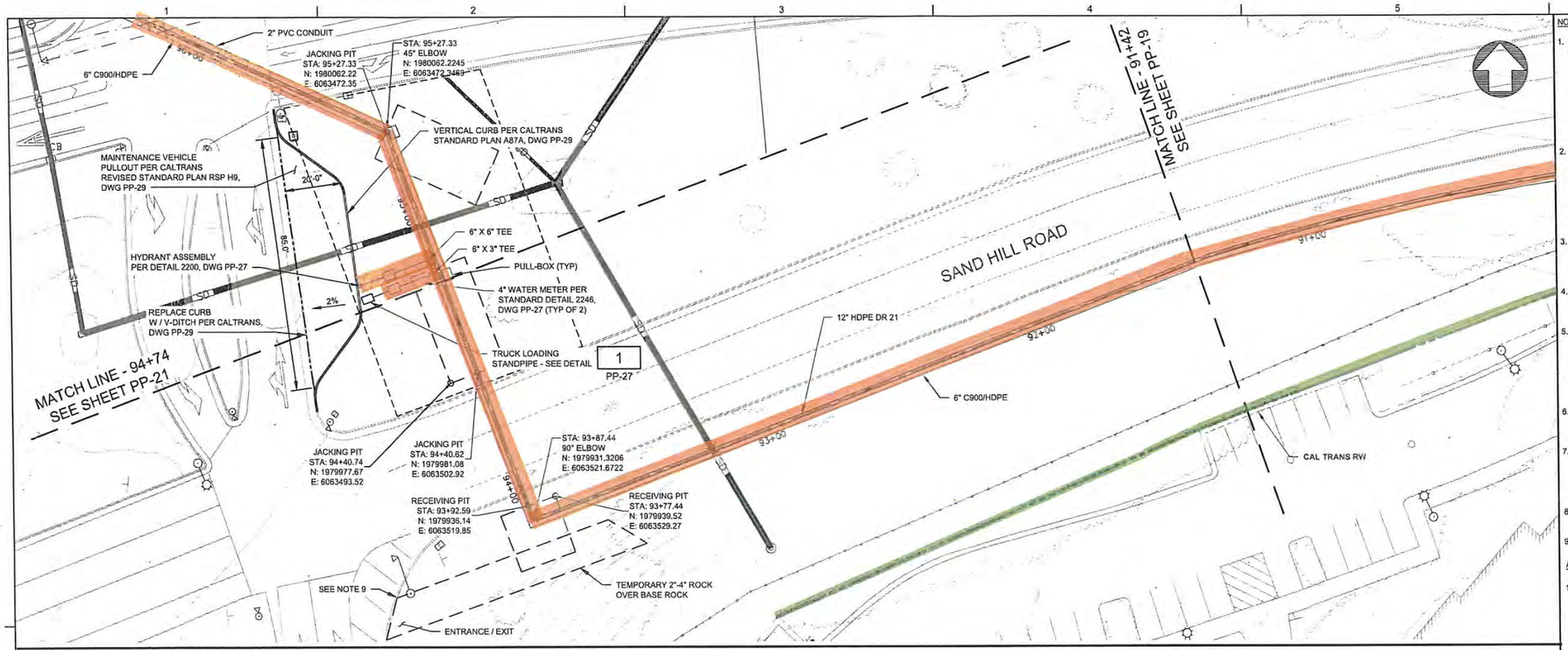

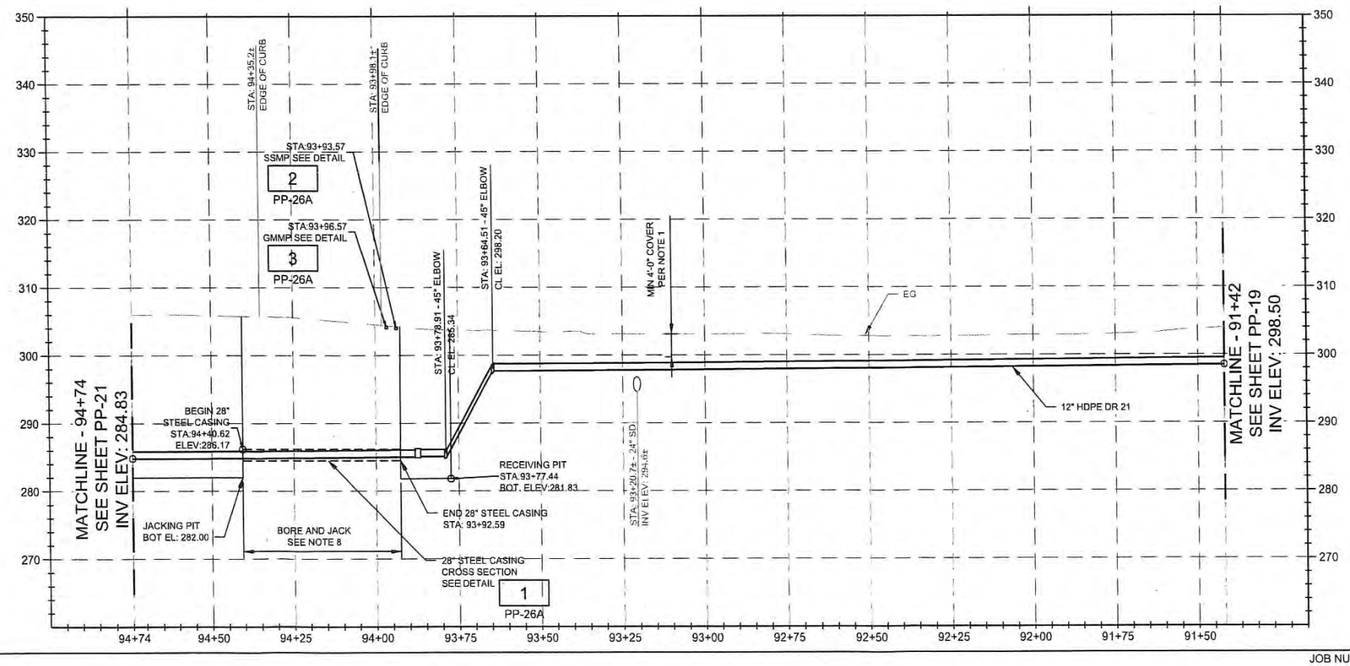

NOTES:

1. COVER FOR BURIED PIPE IS 4'-0" MIN IN PAVED AREAS, PER WBSD DETAIL 8, UNLESS OTHERWISE NOTED. IN UNPAVED AREAS, 3'-0" COVER IS REQUIRED PER DETAIL 2 ON DWG PP-27, UNLESS OTHERWISE NOTED. REPLACE TRENCH BACKFILL MATERIAL WITH CLSM IF BURIED PIPE COVER IS LESS THAN MIN.
2. DESIGN PIPES SHOWN MINIMIZE HIGH POINTS AND MAINTAIN 4'-0" MIN. COVER. CONTRACTOR MAY DEVIATE PROVIDED THAT 4'-0" MIN. COVER IS MAINTAINED AND NO ADDITIONAL HIGH POINTS ARE ADDED. NO ZERO PIPE SLOPES ARE ALLOWED.
3. CONTRACTOR SHALL MAINTAIN ACCESS FOR ALL LOCAL RESIDENTS AT ALL TIMES DURING CONSTRUCTION.
4. CONTRACTOR SHALL MAINTAIN UTILITY SERVICES UNDISRUPTED TO HOMEOWNERS AT ALL TIMES.
5. CONTRACTOR SHALL VERIFY POINT OF CONNECTION PRIOR TO CONSTRUCTION. LOCATIONS SHOWN ARE BEST REPRESENTATION BASED ON FIELD VISITS AND AS-BUILT DRAWINGS.
6. 12" MIN. CLEARANCE FROM OTHER UTILITIES UNLESS OTHERWISE NOTED.
7. THE WATER MAIN SHOULD HAVE NO JOINTS WITHIN 8 FEET FROM EITHER SIDE OF A STORM DRAIN OR SEWER LINE AT NO LESS THAN 45°.
8. INSTALL 48 LF OF 28-INCH DIAMETER STEEL CASING USING BORE AND JACK METHOD.
9. POST SIGN SATING CONSTRUCTION WORK AREA.

ARBORIST NOTES:

1. TREES SHOWN ON DRAWING TO BE PROTECTED AS INDICATED IN ARBORIST TREE PROTECTION PLAN . EXTEND PROTECTION A MINIMUM OF 2' EITHER SIDE OF TRUNK. FOR CLUSTER OF TREES, PROTECT CONTINUOUSLY PAST END TREE PLUS 2'.

LEGEND

- CALTRANS RIGHT OF WAY LIMITS
- INFRASTRUCTURE FOR WHICH WEST BAY SANITARY DISTRICT HAS MAINTENANCE RESPONSIBILITY

20 0 20 40 FEET
HORIZ SCALE 1"=20'
10 0 10 20 FEET
VERT SCALE 1"=10'

NO.	DATE	REVISION	BY	APV'D
2	3/8/19	CALTRANS ENCROACHMENT PERMIT	KPA	SK
1	10/19/18	FORCE MAIN ALIGNMENT	KPA	SM

WEST BAY SANITARY DISTRICT OPERATIONS AND MAINTENANCE AGREEMENT

EXHIBIT A
PAGE 4 OF 11

PLAN AND PROFILE

STATION 91+42 TO 94+74

DRAWING NUMBER
PP-20

JOB NUMBER: 18-002 FILENAME: 18-002-PP-20.DWG PLOT DATE: 03/11/19 PLOT TIME: 13:59:02

Q:\PROJECTS\18-002 SHARON HEIGHTS GOLF CLUB WRF\DRAWINGS\DELIVERABLES\18-002-PP-20.DWG

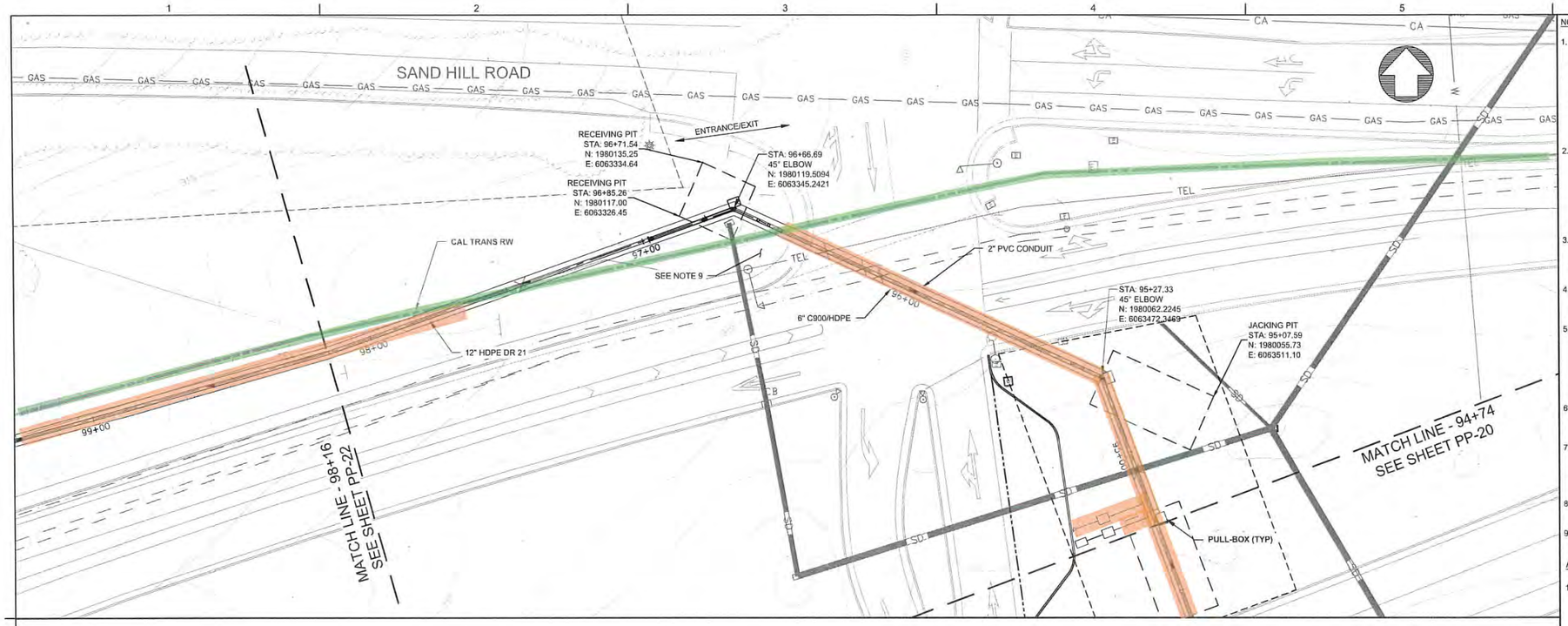

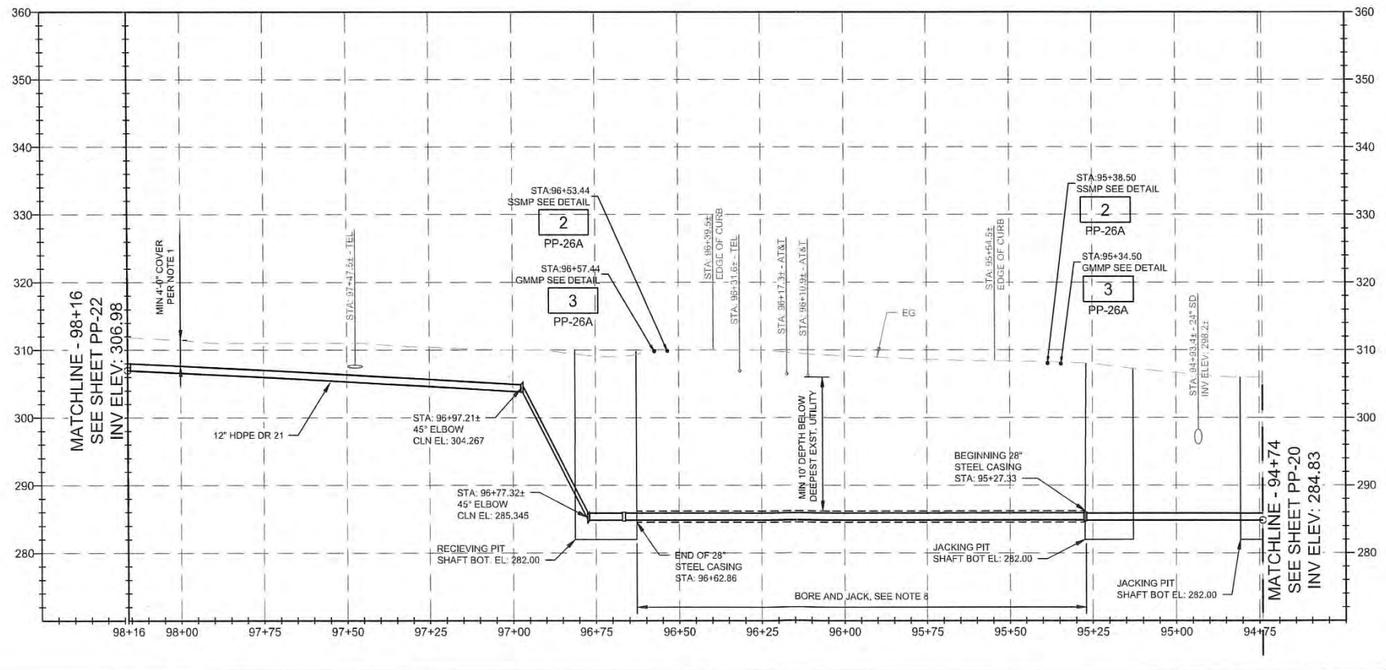

NOTES:

1. COVER FOR BURIED PIPE IS 4'-0" MIN IN PAVED AREAS, PER WBSD DETAIL 8, UNLESS OTHERWISE NOTED. IN UNPAVED AREAS, 3'-0" COVER IS REQUIRED PER DETAIL 2 ON DWG PP-27, UNLESS OTHERWISE NOTED, REPLACE TRENCH BACKFILL MATERIAL WITH CLSM IF BURIED PIPE COVER IS LESS THAN MIN.
2. DESIGN PIPES SHOWN MINIMIZE HIGH POINTS AND MAINTAIN 4'-0" MIN. COVER. CONTRACTOR MAY DEVIATE PROVIDED THAT 4'-0" MIN. COVER IS MAINTAINED AND NO ADDITIONAL HIGH POINTS ARE ADDED. NO ZERO PIPE SLOPES ARE ALLOWED.
3. CONTRACTOR SHALL MAINTAIN ACCESS FOR ALL LOCAL RESIDENTS AT ALL TIMES DURING CONSTRUCTION.
4. CONTRACTOR SHALL MAINTAIN UTILITY SERVICES UNDISRUPTED TO HOMEOWNERS AT ALL TIMES.
5. CONTRACTOR SHALL VERIFY POINT OF CONNECTION PRIOR TO CONSTRUCTION. LOCATIONS SHOWN ARE BEST REPRESENTATION BASED ON FIELD VISITS AND AS-BUILT DRAWINGS.
6. 12" MIN. CLEARANCE FROM OTHER UTILITIES UNLESS OTHERWISE NOTED.
7. THE WATER MAIN SHOULD HAVE NO JOINTS WITHIN 8 FEET FROM EITHER SIDE OF A STORM DRAIN OR SEWER LINE AT NO LESS THAN 45°.
8. INSTALL 135.5 LF OF 28-INCH DIAMETER STEEL CASING USING BORE AND JACK METHOD.
9. POST SIGN STATING CONSTRUCTION WORK IN AREA.

ARBORIST NOTES:

1. TREES SHOWN ON DRAWING TO BE PROTECTED AS INDICATED IN ARBORIST TREE PROTECTION PLAN . EXTEND PROTECTION A MINIMUM OF 2' EITHER SIDE OF TRUNK. FOR CLUSTER OF TREES, PROTECT CONTINUOUSLY PAST END TREE PLUS 2'.

NO.	DATE	REVISION	BY	APVD
2	03/8/19	CALTRANS ENCROACHMENT PERMIT	KPA	SK
1	10/19/18	FORCE MAIN ALIGNMENT	KPA	SM

LEGEND

- CALTRANS RIGHT OF WAY LIMITS
- INFRASTRUCTURE FOR WHICH WEST BAY SANITARY DISTRICT HAS MAINTENANCE RESPONSIBILITY

20 0 20 40 FEET
HORIZ SCALE 1"=20'

10 0 10 20 FEET
VERT SCALE 1"=10'

REGISTERED PROFESSIONAL ENGINEER — KRIS A. MARCH — No. C70952 — EXP. 6-30-19 — CIVIL — STATE OF CALIFORNIA

3-11-19

WEST BAY SANITARY DISTRICT OPERATIONS AND MAINTENANCE AGREEMENT

EXHIBIT A

PAGE 5 OF 11

PLAN AND PROFILE

STATION 94+74 TO 98+16

DRAWING NUMBER PP-21

Q:\PROJECTS\18-002 SHARON HEIGHTS GOLF CLUB WRF\DRAWINGS\DELIVERABLES\18-002-PP-21.DWG

JOB NUMBER: 18-002 FILENAME: 18-002-PP-21.DWG PLOT DATE: 03/11/19 PLOT TIME: 13:59:17

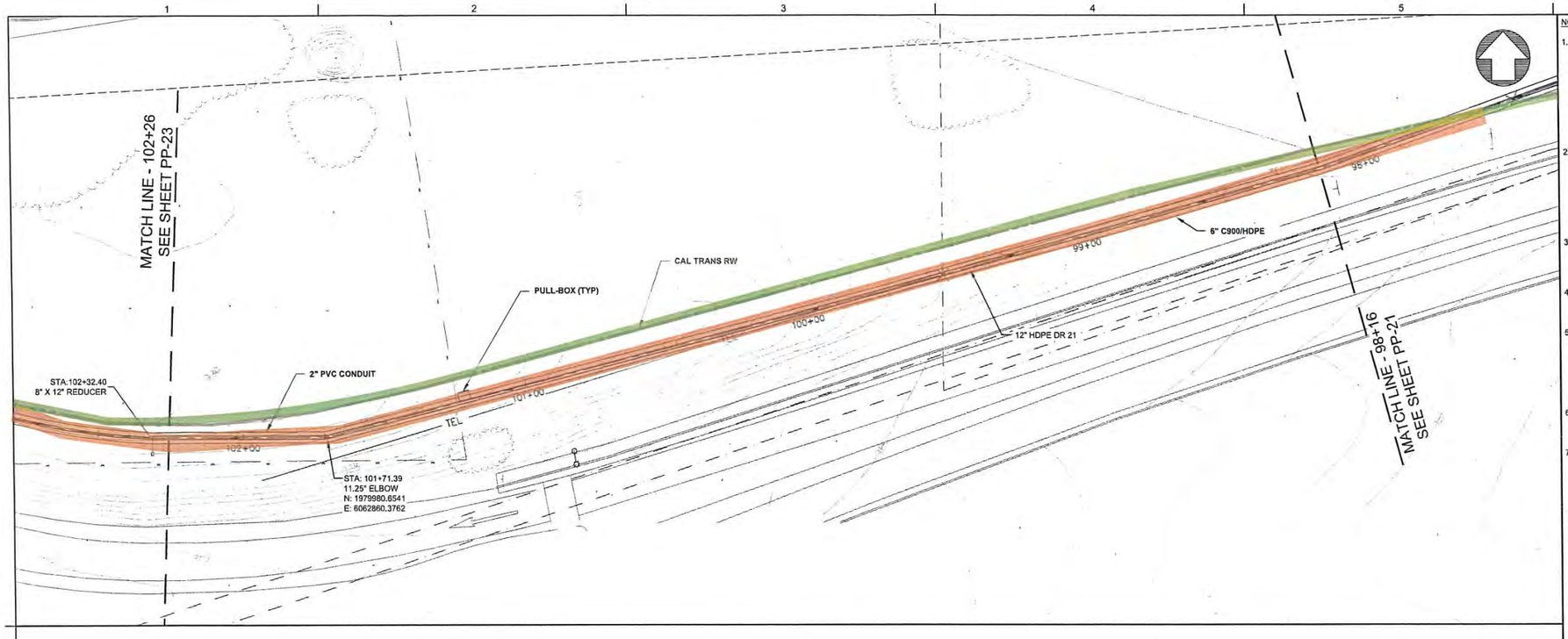

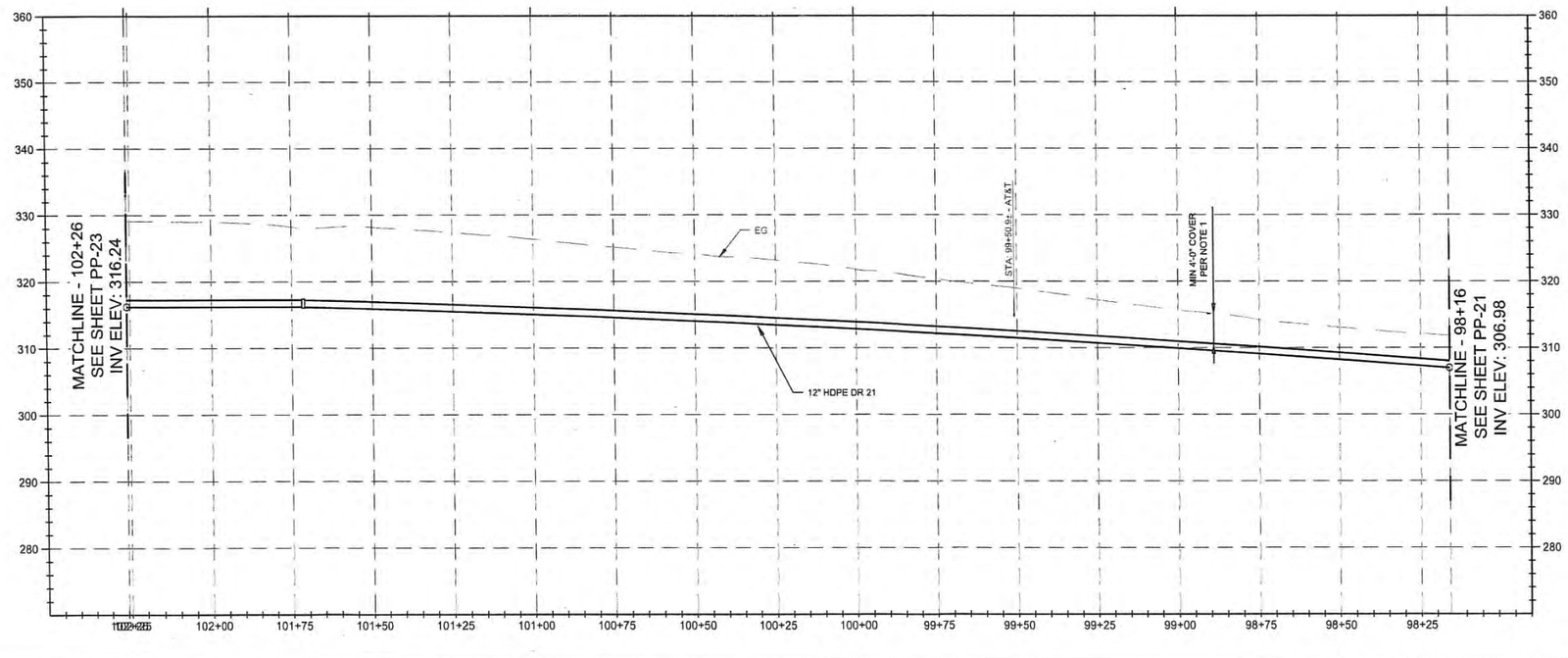

NOTES:

1. COVER FOR BURIED PIPE IS 4'-0" MIN IN PAVED AREAS, PER WBSD DETAIL 8, UNLESS OTHERWISE NOTED. IN UNPAVED AREAS, 3'-0" COVER IS REQUIRED PER DETAIL 2 ON DWG PP-27, UNLESS OTHERWISE NOTED. REPLACE TRENCH BACKFILL MATERIAL WITH CLSM IF BURIED PIPE COVER IS LESS THAN MIN.
2. DESIGN PIPES SHOWN MINIMIZE HIGH POINTS AND MAINTAIN 4'-0" MIN. COVER. CONTRACTOR MAY DEVIATE PROVIDED THAT 4'-0" MIN. COVER IS MAINTAINED AND NO ADDITIONAL HIGH POINTS ARE ADDED. NO ZERO PIPE SLOPES ARE ALLOWED.
3. CONTRACTOR SHALL MAINTAIN ACCESS FOR ALL LOCAL RESIDENTS AT ALL TIMES DURING CONSTRUCTION.
4. CONTRACTOR SHALL MAINTAIN UTILITY SERVICES UNDISRUPTED TO HOMEOWNERS AT ALL TIMES.
5. CONTRACTOR SHALL VERIFY POINT OF CONNECTION PRIOR TO CONSTRUCTION. LOCATIONS SHOWN ARE BEST REPRESENTATION BASED ON FIELD VISITS AND AS-BUILT DRAWINGS.
6. 12" MIN. CLEARANCE FROM OTHER UTILITIES UNLESS OTHERWISE NOTED.
7. THE WATER MAIN SHOULD HAVE NO JOINTS WITHIN 8 FEET FROM EITHER SIDE OF A STORM DRAIN OR SEWER LINE AT NO LESS THAN 45°.

ARBORIST NOTES:

1. TREES SHOWN ON DRAWING TO BE PROTECTED AS INDICATED IN ARBORIST TREE PROTECTION PLAN . EXTEND PROTECTION A MINIMUM OF 2' EITHER SIDE OF TRUNK. FOR CLUSTER OF TREES, PROTECT CONTINUOUSLY PAST END TREE PLUS 2'.

NO.	DATE	REVISION	BY	APVD
2	13/8/19	CALTRANS ENCROACHMENT PERMIT	KPA	SK
1	10/19/18	FORCE MAIN ALIGNMENT	KPA	SM

LEGEND

- CALTRANS RIGHT OF WAY LIMITS
- INFRASTRUCTURE FOR WHICH WEST BAY SANITARY DISTRICT HAS MAINTENANCE RESPONSIBILITY

20 0 20 40 FEET
HORIZ SCALE 1"=20'

10 0 10 20 FEET
VERT SCALE 1"=10'

9

WEST BAY SANITARY DISTRICT OPERATIONS AND MAINTENANCE AGREEMENT

EXHIBIT A
PAGE 6 OF 11

PLAN AND PROFILE

STATION 98+16 TO 102+26

DRAWING NUMBER
PP-22

Q:\PROJECTS\18-002 SHARON HEIGHTS GOLF CLUB WRF\DRAWINGS\DELIVERABLES\18-002-PP-22.DWG

JOB NUMBER: 18-002 FILENAME: 18-002-PP-22.DWG PLOT DATE: 03/11/19 PLOT TIME: 13:59:31

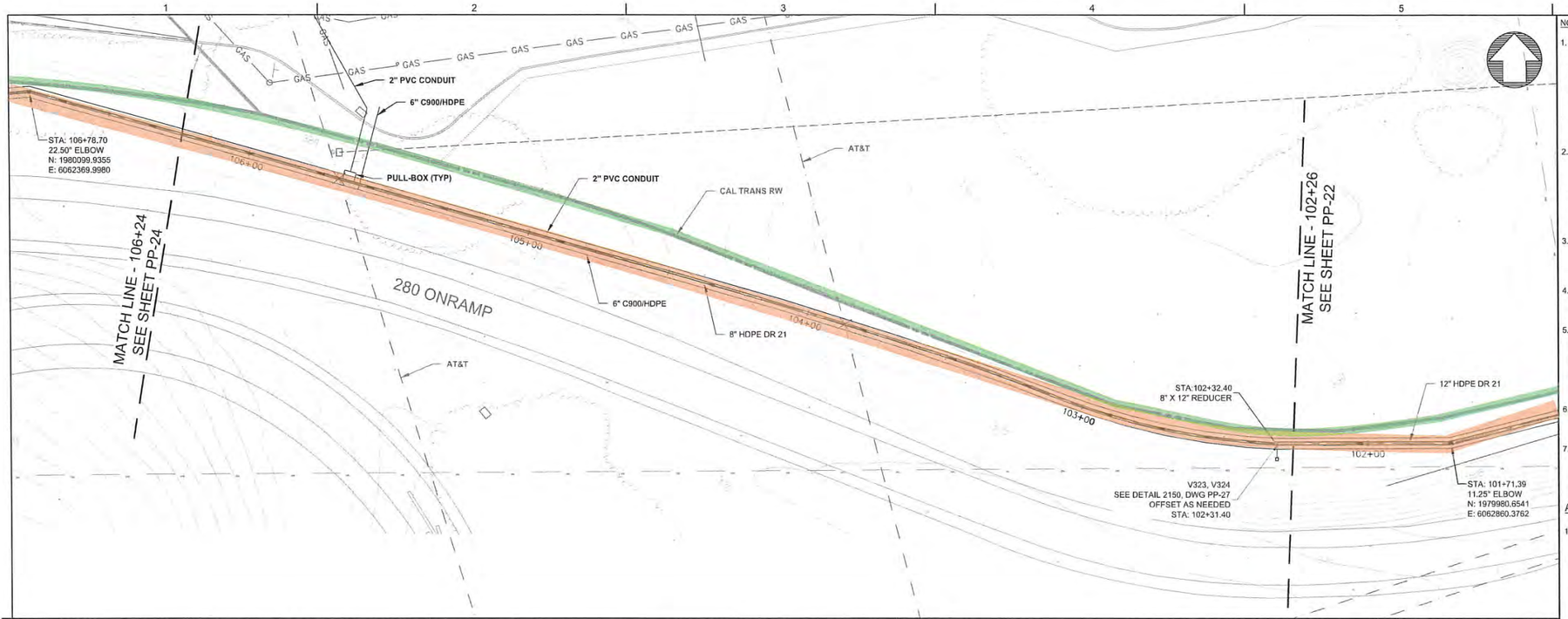

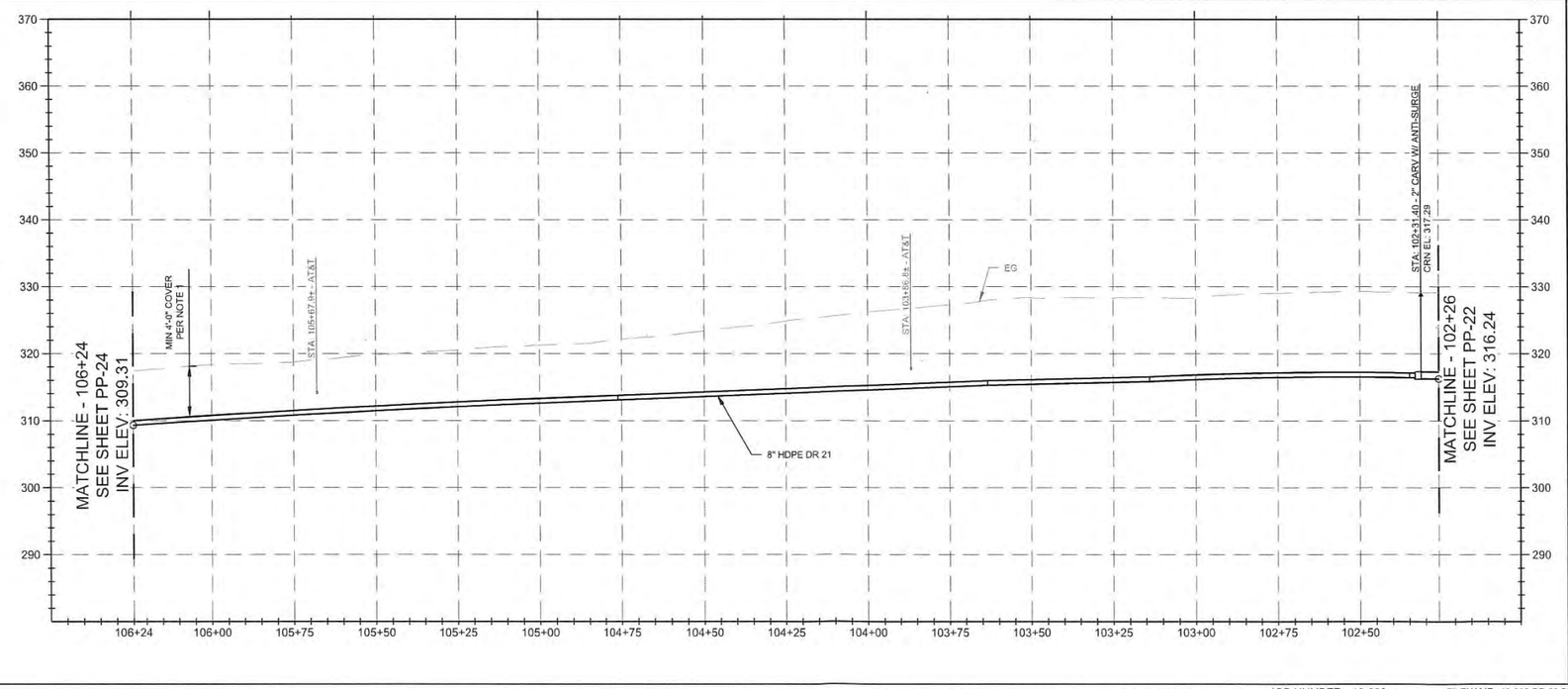

NOTES:

1. COVER FOR BURIED PIPE IS 4'-0" MIN IN PAVED AREAS, PER WBSD DETAIL 8, UNLESS OTHERWISE NOTED. IN UNPAVED AREAS, 3'-0" COVER IS REQUIRED PER DETAIL 2 ON DWG PP-27, UNLESS OTHERWISE NOTED, REPLACE TRENCH BACKFILL MATERIAL WITH CLSM IF BURIED PIPE COVER IS LESS THAN MIN.
2. DESIGN PIPES SHOWN MINIMIZE HIGH POINTS AND MAINTAIN 4'-0" MIN. COVER. CONTRACTOR MAY DEVIATE PROVIDED THAT 4'-0" MIN. COVER IS MAINTAINED AND NO ADDITIONAL HIGH POINTS ARE ADDED. NO ZERO PIPE SLOPES ARE ALLOWED.
3. CONTRACTOR SHALL MAINTAIN ACCESS FOR ALL LOCAL RESIDENTS AT ALL TIMES DURING CONSTRUCTION.
4. CONTRACTOR SHALL MAINTAIN UTILITY SERVICES UNDISRUPTED TO HOMEOWNERS AT ALL TIMES.
5. CONTRACTOR SHALL VERIFY POINT OF CONNECTION PRIOR TO CONSTRUCTION. LOCATIONS SHOWN ARE BEST REPRESENTATION BASED ON FIELD VISITS AND AS-BUILT DRAWINGS.
6. 12" MIN. CLEARANCE FROM OTHER UTILITIES UNLESS OTHERWISE NOTED.
7. THE WATER MAIN SHOULD HAVE NO JOINTS WITHIN 8 FEET FROM EITHER SIDE OF A STORM DRAIN OR SEWER LINE AT NO LESS THAN 45°.

ARBORIST NOTES:

1. TREES SHOWN ON DRAWING TO BE PROTECTED AS INDICATED IN ARBORIST TREE PROTECTION PLAN . EXTEND PROTECTION A MINIMUM OF 2' EITHER SIDE OF TRUNK. FOR CLUSTER OF TREES, PROTECT CONTINUOUSLY PAST END TREE PLUS 2'.

NO.	DATE	REVISION	BY	APVD
2	3/8/19	CALTRANS ENCROACHMENT PERMIT	KPA	SK
1	10/19/18	FORCE MAIN ALIGNMENT	KPA	SM

LEGEND

- CALTRANS RIGHT OF WAY LIMITS
- INFRASTRUCTURE FOR WHICH WEST BAY SANITARY DISTRICT HAS MAINTENANCE RESPONSIBILITY

20 0 20 40 FEET
HORIZ SCALE 1"=20'

10 0 10 20 FEET
VERT SCALE 1"=10'

9

WEST BAY SANITARY DISTRICT OPERATIONS AND MAINTENANCE AGREEMENT

EXHIBIT A
PAGE 7 OF 11

PLAN AND PROFILE

STATION 102+26 TO 106+24

DRAWING NUMBER
PP-23

Q:\PROJECTS\18-002 SHARON HEIGHTS GOLF CLUB WRF\DRAWINGS\DELIVERABLES\18-002-PP-23.DWG

JOB NUMBER: 18-002 FILENAME: 18-002-PP-23.DWG PLOT DATE: 03/11/19 PLOT TIME: 13:59:46

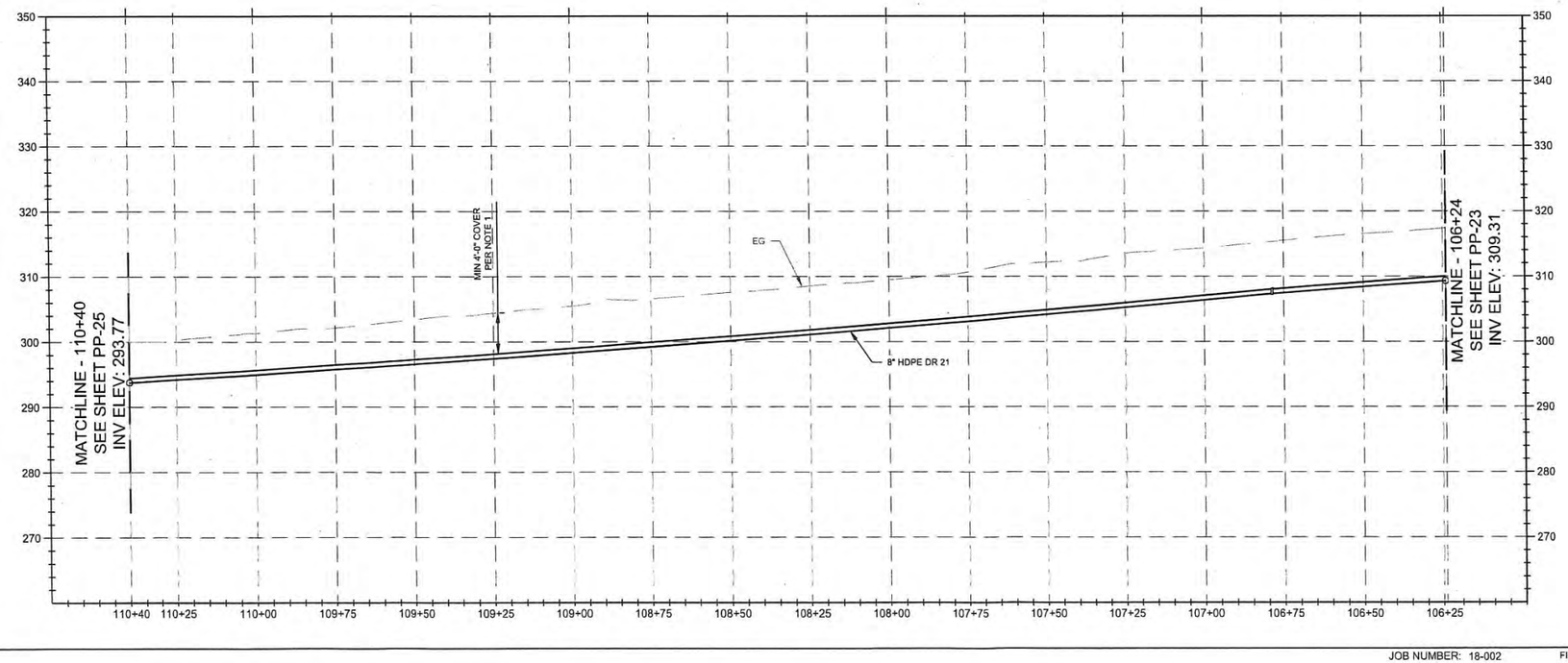

NOTES:

1. COVER FOR BURIED PIPE IS 4'-0" MIN IN PAVED AREAS, PER WBSD DETAIL 8, UNLESS OTHERWISE NOTED. IN UNPAVED AREAS, 3'-0" COVER IS REQUIRED PER DETAIL 2 ON DWG PP-27, UNLESS OTHERWISE NOTED. REPLACE TRENCH BACKFILL MATERIAL WITH CLSM IF BURIED PIPE COVER IS LESS THAN MIN.
2. DESIGN PIPES SHOWN MINIMIZE HIGH POINTS AND MAINTAIN 4'-0" MIN. COVER. CONTRACTOR MAY DEVIATE PROVIDED THAT 4'-0" MIN. COVER IS MAINTAINED AND NO ADDITIONAL HIGH POINTS ARE ADDED. NO ZERO PIPE SLOPES ARE ALLOWED.
3. CONTRACTOR SHALL MAINTAIN ACCESS FOR ALL LOCAL RESIDENTS AT ALL TIMES DURING CONSTRUCTION.
4. CONTRACTOR SHALL MAINTAIN UTILITY SERVICES UNDISRUPTED TO HOMEOWNERS AT ALL TIMES.
5. CONTRACTOR SHALL VERIFY POINT OF CONNECTION PRIOR TO CONSTRUCTION. LOCATIONS SHOWN ARE BEST REPRESENTATION BASED ON FIELD VISITS AND AS-BUILT DRAWINGS.
6. 12" MIN. CLEARANCE FROM OTHER UTILITIES UNLESS OTHERWISE NOTED.
7. THE WATER MAIN SHOULD HAVE NO JOINTS WITHIN 8 FEET FROM EITHER SIDE OF A STORM DRAIN OR SEWER LINE AT NO LESS THAN 45°.

ARBORIST NOTES:

1. TREES SHOWN ON DRAWING TO BE PROTECTED AS INDICATED IN ARBORIST TREE PROTECTION PLAN . EXTEND PROTECTION A MINIMUM OF 2' EITHER SIDE OF TRUNK. FOR CLUSTER OF TREES, PROTECT CONTINUOUSLY PAST END TREE PLUS 2'.

LEGEND

CALTRANS RIGHT OF WAY LIMITS

INFRASTRUCTURE FOR WHICH WEST BAY SANITARY DISTRICT HAS MAINTENANCE RESPONSIBILITY

20 0 20 40 FEET
HORIZ SCALE 1"=20'

10 0 10 20 FEET
VERT SCALE 1"=10'

NO.	DATE	REVISION	BY	APVD
2	3/8/19	CALTRANS ENCROACHMENT PERMIT	KPA	SK
1	10/19/18	FORCE MAIN ALIGNMENT	KPA	SM

REGISTERED PROFESSIONAL ENGINEER
KRISTEN A. MARIE A. KING
No. C70662
EXP. 6-30-19
CIVIL
STATE OF CALIFORNIA
3-11-19

WEST BAY SANITARY DISTRICT OPERATIONS AND MAINTENANCE AGREEMENT

EXHIBIT A
PAGE 8 OF 11

PLAN AND PROFILE

STATION 106+24 TO 110+40

DRAWING NUMBER
PP-24

Q:\PROJECTS\18-002 SHARON HEIGHTS GOLF CLUB WRF\DRAWINGS\DELIVERABLES\18-002-PP-24.DWG

JOB NUMBER: 18-002 FILENAME: 18-002-PP-24.DWG PLOT DATE: 03/11/19 PLOT TIME: 13:59:58

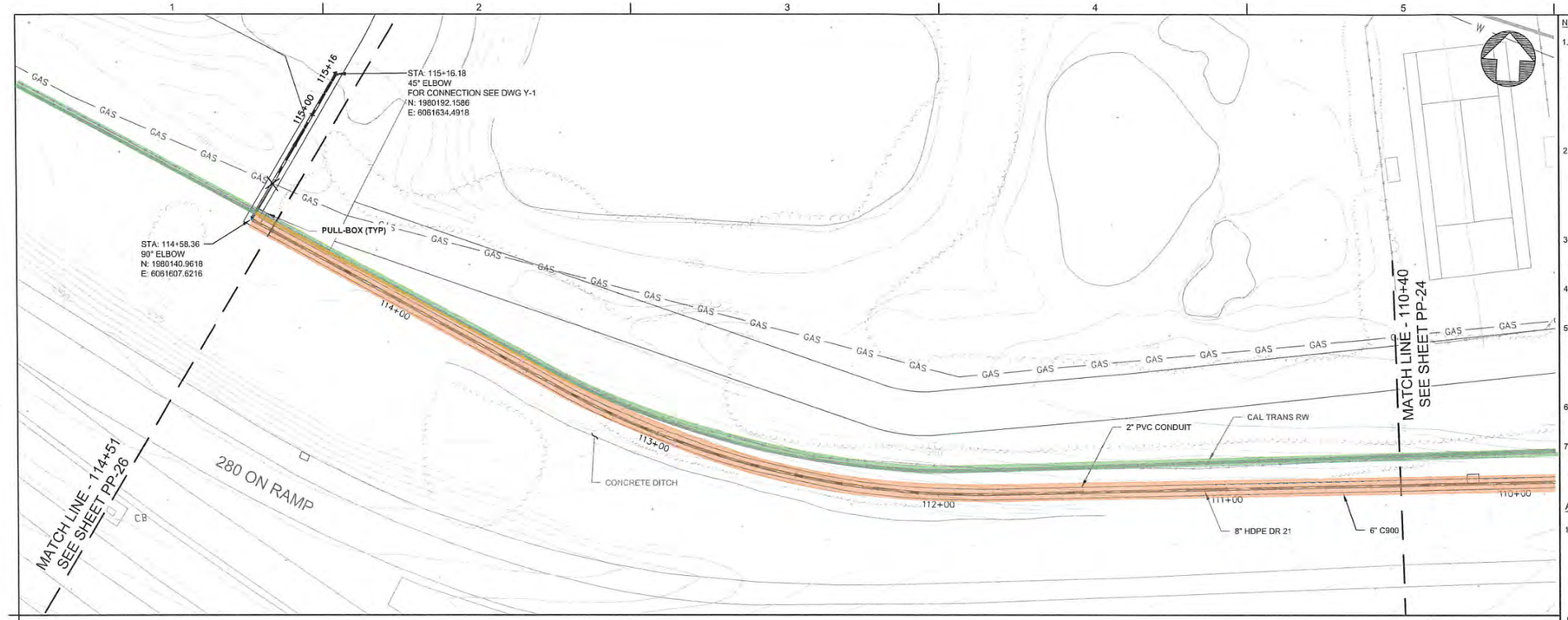

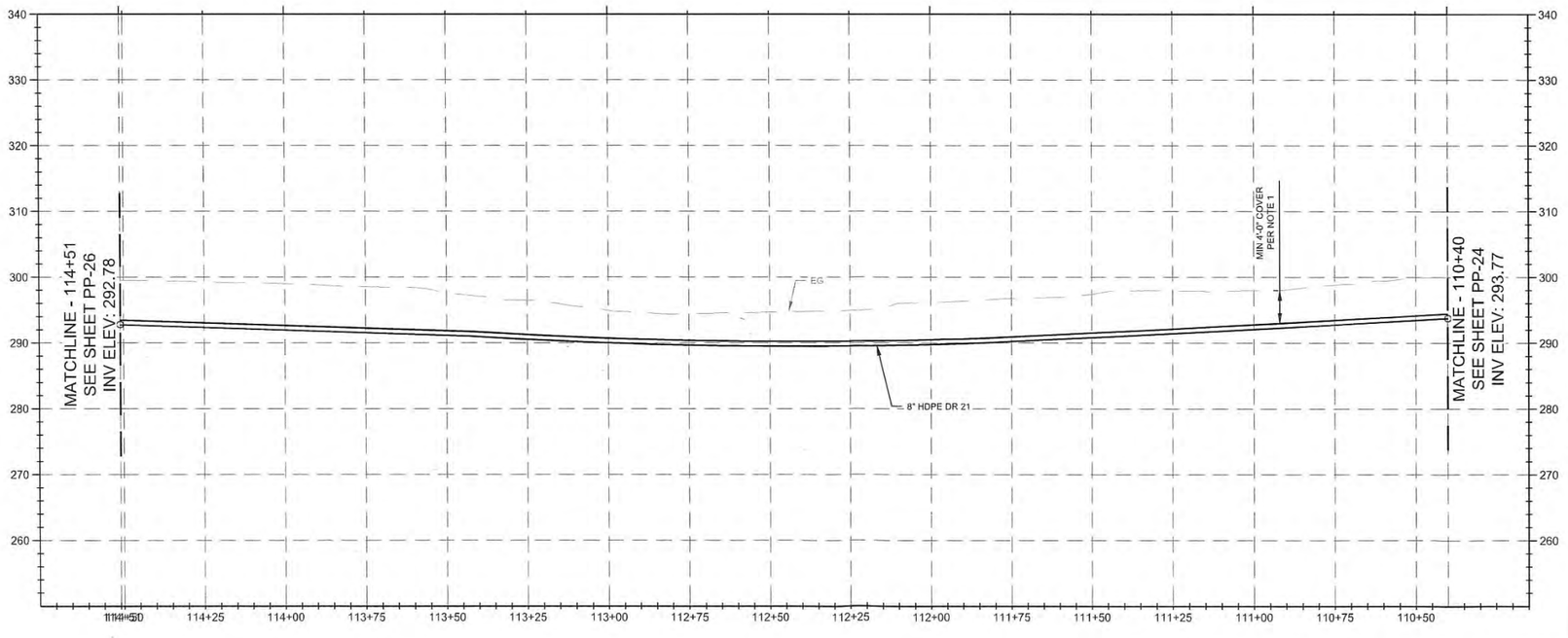

NOTES:

1. COVER FOR BURIED PIPE IS 4'-0" MIN IN PAVED AREAS, PER WBSD DETAIL 8, UNLESS OTHERWISE NOTED. IN UNPAVED AREAS, 3'-0" COVER IS REQUIRED PER DETAIL 2 ON DWG PP-27, UNLESS OTHERWISE NOTED. REPLACE TRENCH BACKFILL MATERIAL WITH CLSM IF BURIED PIPE COVER IS LESS THAN MIN.
2. DESIGN PIPES SHOWN MINIMIZE HIGH POINTS AND MAINTAIN 4'-0" MIN. COVER. CONTRACTOR MAY DEVIATE PROVIDED THAT 4'-0" MIN. COVER IS MAINTAINED AND NO ADDITIONAL HIGH POINTS ARE ADDED. NO ZERO PIPE SLOPES ARE ALLOWED.
3. CONTRACTOR SHALL MAINTAIN ACCESS FOR ALL LOCAL RESIDENTS AT ALL TIMES DURING CONSTRUCTION.
4. CONTRACTOR SHALL MAINTAIN UTILITY SERVICES UNDISRUPTED TO HOMEOWNERS AT ALL TIMES.
5. CONTRACTOR SHALL VERIFY POINT OF CONNECTION PRIOR TO CONSTRUCTION. LOCATIONS SHOWN ARE BEST REPRESENTATION BASED ON FIELD VISITS AND AS-BUILT DRAWINGS.
6. 12" MIN. CLEARANCE FROM OTHER UTILITIES UNLESS OTHERWISE NOTED.
7. THE WATER MAIN SHOULD HAVE NO JOINTS WITHIN 8 FEET FROM EITHER SIDE OF A STORM DRAIN OR SEWER LINE AT NO LESS THAN 45°.

ARBORIST NOTES:

1. TREES SHOWN ON DRAWING TO BE PROTECTED AS INDICATED IN ARBORIST TREE PROTECTION PLAN . EXTEND PROTECTION A MINIMUM OF 2' EITHER SIDE OF TRUNK. FOR CLUSTER OF TREES, PROTECT CONTINUOUSLY PAST END TREE PLUS 2'.

LEGEND

CALTRANS RIGHT OF WAY LIMITS

INFRASTRUCTURE FOR WHICH WEST BAY SANITARY DISTRICT HAS MAINTENANCE RESPONSIBILITY

20 0 20 40 FEET
HORIZ SCALE 1"=20'

10 0 10 20 FEET
VERT SCALE 1"=10'

NO.	DATE	REVISION	BY	APVD
12	13/8/19	CALTRANS ENCROACHMENT PERMIT	KPA	SK
9	10/19/18	FORCE MAIN ALIGNMENT	KPA	SM

WEST BAY SANITARY DISTRICT OPERATIONS AND MAINTENANCE AGREEMENT

EXHIBIT A

PAGE 9 OF 11

PLAN AND PROFILE

STATION 110+40 TO 114+51

REGISTERED PROFESSIONAL ENGINEER KRISTINA MARIE A. PACON No. C70952 EXP. 6-30-19 CIVIL STATE OF CALIFORNIA 3-11-19

DRAWING NUMBER
PP-25

Q:\PROJECTS\18-002 SHARON HEIGHTS GOLF CLUB WRF\DRAWINGS\DELIVERABLES\18-002-PP-25.DWG

JOB NUMBER: 18-002 FILENAME: 18-002-PP-25.DWG PLOT DATE: 03/11/19 PLOT TIME: 14:00:13

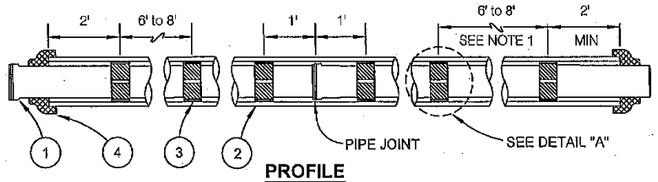

PROFILE

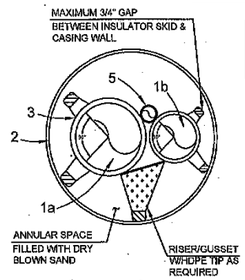

DETAIL "A"

ITEM	DESCRIPTION
1a	12-INCH CARRIER / SEWER FM, HDPE DR21
1b	6-INCH CARRIER / RECYCLED WATER, C900
2	28-INCH STEEL CASING PIPE WITH 0.25-INCH THICK WALL, AND ALL JOINTS FULLY BUTT WELDED
3	INSULATORS, 8-INCH WIDE VINYL COATED STEEL BAND, 2" WIDE RUNNERS, CENTERED AND RESTRAINED (CALPICO, GPT INDUSTRIES OR EQUAL)
4	END SEALS, SYNTHETIC RUBBER, WRAP AROUND WITH SELF-ADHERING SEAM OR SLIP-ON BOOT, STAINLESS STEEL BANDS (CALPICO, GPT INDUSTRIES OR EQUAL)
5	2" COMMUNICATION CONDUIT IN NORTHERN BORE AND JACK ONLY

1 CASING DETAIL
PP-20 NTS

NOTES:

1. PROVIDE MINIMUM THREE SPACERS PER STANDARD LENGTH 18' TO 20' HDPE AND PLACE TO SUPPORT EACH SIDE OF JOINTS AND CENTER MIDDLE INSULATOR EQUALLY FROM ENDS.
2. ALL WORK SHALL CONFORM TO REQUIREMENTS OF THE CAL-TRANS ENCROACHMENT PERMITS MANUAL SECTION 623.1, 623.1A AND 623.1B, AND SPECIFIC TERMS AND CONDITIONS OF THE ISSUED ENCROACHMENT PERMIT (PERMIT NUMBER XXXXXXX).
3. CONTRACTOR SHALL OBTAIN A PROJECT OR ANNUAL PERMIT FOR EXCAVATIONS FOR SUBJECT WORK IN CONFORMANCE WITH CAL-OSHA REGULATIONS. ALL PITS SHALL BE SHEETED, SHORED AND BRACED ACCORDING TO THE DIVISION OF INDUSTRIAL SAFETY, CONSTRUCTION SAFETY ORDERS, ARTICLE 6, EXCAVATIONS, SECTIONS 1539-1543.
4. BORE AND RECEIVING PITS SHALL CONFORM TO CAL-TRANS ENCROACHMENT PERMITS MANUAL, SECTION 623.1B AND ADEQUATELY SHORED TO ENSURE AGAINST GROUND MOVEMENT AND TO SAFEGUARD EXISTING SURFACE IMPROVEMENTS AND SUBSTRUCTURES. PITS SHALL NOT AFFECT STATE FACILITIES OR CREATE A HAZARD TO TRAVELING PUBLIC; DAMAGE TO STATE FACILITIES SHALL BE REPLACED IN-KIND OR REPAIRED TO ORIGINAL CONDITION.
5. ALL PITS SHALL BE FENCED AND/OR TYPE-K BARRIER PLACED FOR PROTECTION OR AS OTHERWISE DIRECTED BY CAL-TRANS' REPRESENTATIVE. PITS LEFT OPEN OVERNIGHT SHALL HAVE A 6-FT HIGH FENCE WITH PANEL SECTIONS SECURELY FASTENED TOGETHER FOR PEDESTRIAN SAFETY. REFLECTORS SHALL BE SECURED TO SIDES OF FENCE THAT FACE TRAFFIC.
6. SUBSURFACE MONITORING POINTS SHALL BE INSTALLED AND SURVEYED PRIOR TO STARTING WORK. POINTS SHALL BE MONITORED REGULARLY DURING BORE AND JACK OPERATIONS AND CAL-TRANS REPRESENTATIVE NOTIFIED IMMEDIATELY OF ANY GROUND MOVEMENT OR CHANGE IN ELEVATION.

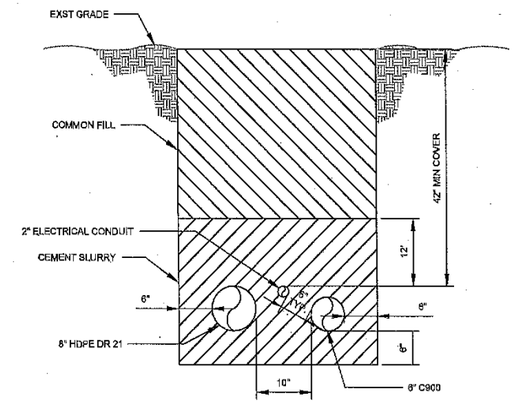

4 TYP TRENCH DETAIL STA: 94+77 TO STA: 114+98
- NTS

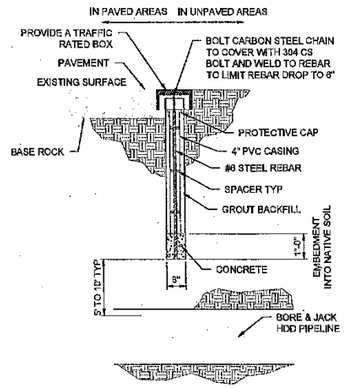

2 SUB-SURFACE MONITORING POINT (SSMP)
PP-20 NTS

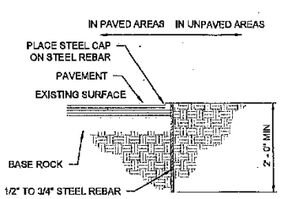

3 GROUND MOVEMENT MONITORING POINT (GMMP)
PP-20 NTS

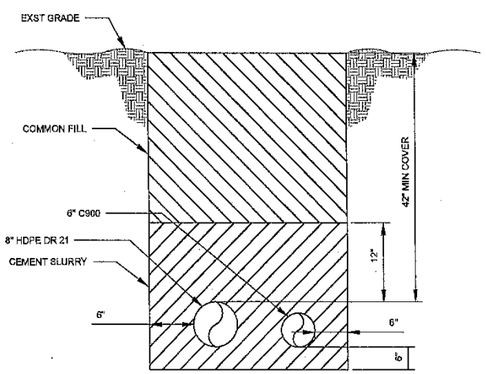

5 TYP TRENCH DETAIL STA: 85+03 TO STA: 94+77
- NTS

NO.	DATE	REVISION	BY	APVD
2	5/30/19	CALTRANS ENCROACHMENT PERMIT	KPA	SK

WEST BAY SANITARY DISTRICT OPERATIONS AND MAINTENANCE AGREEMENT

EXHIBIT A
PAGE 10 OF 11

CIVIL

DETAILS AND SECTIONS

DRAWING NUMBER
PP-26A

REGISTERED PROFESSIONAL ENGINEER
MARIE A. CHAN
No. C76392
EXP: 6-30-19
CIVIL
STATE OF CALIFORNIA
3-11-19

JOB NUMBER: 18-002 FILENAME: 18-002-PP-26A.DWG PLOT DATE: 05/30/19 PLOT TIME: 12:36:51

Q:\PROJECTS\18-002 SHARON HEIGHTS GOLF CLUB WRP\DRAWINGS\DELIVERABLES\18-002-PP-26A.DWG

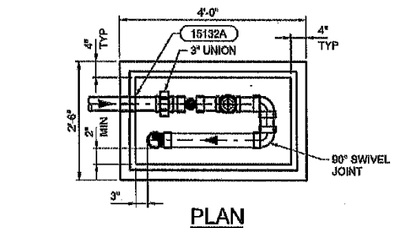

PLAN

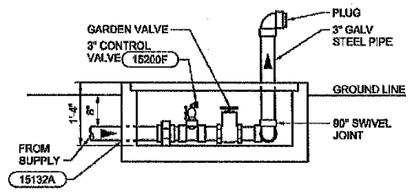

SECTION / ELEVATION

TRUCK LOADING STANDPIPE DETAIL

1 | PP-20 | NOT TO SCALE

CASE 1: FOR TRAFFIC INDEX (TI) LESS THAN OR EQUAL TO 12

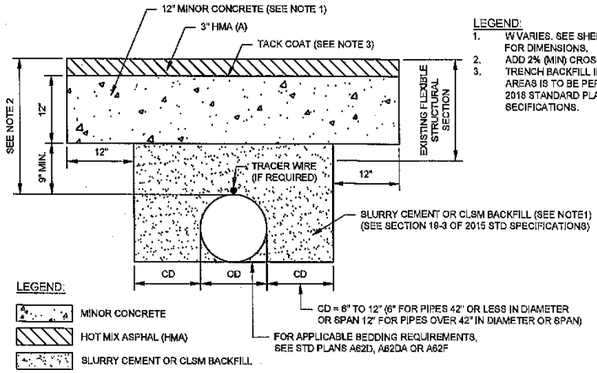

LEGEND:
1. W VARIES. SEE SHEET PP-01A FOR DIMENSIONS.
2. ADD 2% (MIN) CROSS SLOPE.
3. TRENCH BACKFILL IN UNPAVED AREAS IS TO BE PER CALTRANS 2018 STANDARD PLANS AND SECIFICATIONS.

NOTES:
1. CONCRETE CAP MAY BE RAPID STRENOTH CONCRETE (RSC) IF RSC IS USED, REPLACE THE SLURRY CEMENT OR CLSM BACKFILL WITH LEAN CONCRETE BACKFILL OR RSC DEPENDING UPON THE PROJECT'S TIME CONSTRAINTS.
2. FOR NEW INSTALLATIONS, MINIMUM DEPTH OF COVER REQUIREMENTS ARE TO FALLOW GUIDELINES IN THE ENCROACHMENT PERMITS MANUAL OR HIGHWAY DESIGN MANUAL. WHEN COVER OVER A REPLACEMENT PIPE/ENCASEMENT PIPE IS LESS THAN 24", A SPECIAL DESIGN IS NECESSARY (FOR IN-HOUSE PROJECTS, REFER TO HQ DRAINAGE DETAIL LIBRARY).
3. TACK COAT (ASPHALTIC EMULSION) SHALL BE APPLIED PRIOR TO PLACING HMA(A).
4. ALL TRENCH WORK SUBJECT TO STATE REGULATIONS AND INSPECTION.
5. ALL MATERIALS, WORKMANSHIP, TESTING, AND INSPECTIONS SHALL COMPLY WITH CALTRANS STANDARD SPECIFICATIONS AND PROJECT - SPECIFIC PROVISIONS.
6. USE OF THIS DETAIL IS APPLICABLE IF HIGH GROUNDWATER CONDITIONS DO NOT EXIST WITHIN THE TRENCH.

ABBREVIATIONS:

CD = CLEAR DISTANCE
HMA(A) = HOT MIX ASPHALT TYPE A
OD = OUTSIDE DIAMETER OF UTILITY OR CULVERT
CLSM = CONTROLLED LOW-STRENGTH MATERIAL

WALKING PATH TRENCH DETAIL

2 | --- | NOT TO SCALE

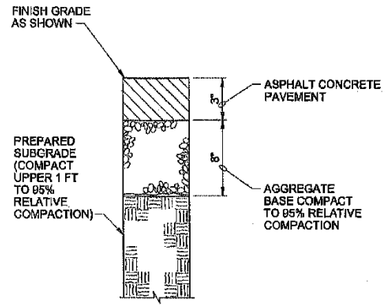

ASPHALT CONCRETE PAVEMENT

NTS

2501

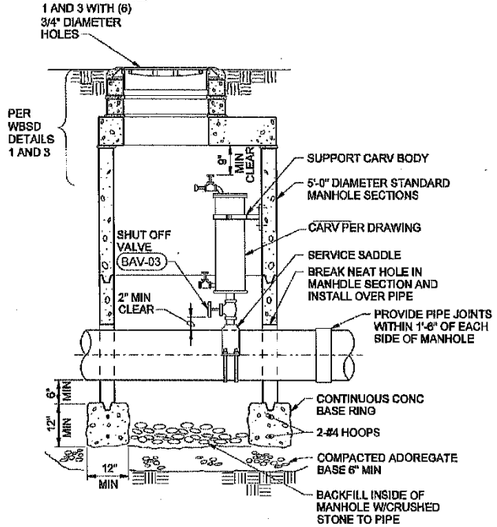

TYPE A COMBINATION AIR RELEASE AND VACUUM VALVE ASSEMBLY (SEWER SERVICE)

NTS

2150

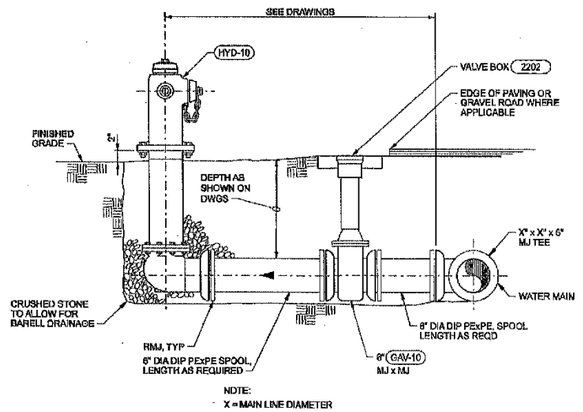

NOTE:
X = MAIN LINE DIAMETER

FIRE HYDRANT ASSEMBLY

NTS

2200

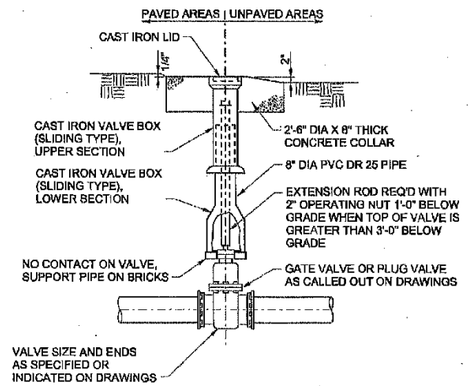

BURIED GATE OR PLUG VALVE BOX, TYPE 1

NTS

2202

REGISTERED PROFESSIONAL ENGINEER — ROBERT MARIE A. PEDRETTI — No. C70052 — CIVIL — STATE OF CALIFORNIA

3-11-19

NO.	DATE	REVISION	BY	APVD
6	10/19/18	FORCE MAIN ALIGNMENT	KPA	SM

WEST BAY SANITARY DISTRICT OPERATIONS AND MAINTENANCE AGREEMENT

EXHIBIT A
PAGE 11 OF 11

PLAN AND PROFILE

PIPELINE DETAILS

DRAWING NUMBER
PP-27

JOB NUMBER: 18-002 FILENAME: 18-002-PIPELINE DETAILS_CALTRANS.DWG DATE: 05/30/19 PLOT TIME: 12:38:14

Q:\PROJECTS\18-002 SHARON HEIGHTS GOLF CLUB\WRD\DRAWINGS\DELIVERABLES\18-002-PIPELINE DETAILS_CALTRANS.DWG

THIS PAGE LEFT INTENTIONALLY BLANK

WEST BAY SANITARY DISTRICT
AGENDA ITEM 8

To: ***Board of Directors***

From: ***Bill Kitajima, Projects & IT Manager***
Jonathan Werness, Engineering Technician

Subject: ***Consideration of Authorizing District Manager to Enter into an Agreement for Adjustment of Sanitary Sewer Manholes with the City of Menlo Park for the 2019 Street Resurfacing Project***

Background

The City of Menlo Park is planning to resurface certain streets in its 2019 Street Resurfacing Project. The District will need to adjust the existing sewer manholes within the City's project area to the new roadway grade.

Analysis

Adjusting/raising of District manholes for the City of Menlo Park resurfacing project is necessary to ensure immediate access to the sewer lines in the affected project area.

The estimated cost of the raising of manholes to grade is $86,920.00. This includes raising approximately Eighty-Two (82) manholes.

Fiscal Impact

There will be no fiscal impact to the General Fund. The Capital Assets Fund for Fiscal Year 2019-2020 is budgeted $100,000 for manhole raising (paving projects).

Recommendation

The Projects & IT Manager recommends that the Board authorize the District Manager to enter into the attached agreement with the City of Menlo Park for the adjustment of sanitary sewer manholes within the 2019 Street Resurfacing Project area.

Attachment: City of Menlo Park Agreement

AGREEMENT

BETWEEN THE CITY OF MENLO PARK AND WEST BAY SANITARY DISTRICT

2019 STREET RESURFACING PROJECT GRADE ADJUST SANITARY MANHOLE COVERS

This Agreement, entered into this _____ day of_____, 2019 by and between the City of Menlo Park, a Municipal Corporation of the State of California, hereinafter called "CITY" and West Bay Sanitary District, a private agency of the State of California hereinafter called "WEST BAY";

W I T N E S S E T H:

WHEREAS, the CITY will resurface certain streets in its 2019 Street Resurfacing Project; and

WHEREAS, all sanitary manhole covers within the construction limit need to be adjusted to grade; and

WHEREAS, WEST BAY would like the work to adjust the sanitary manhole covers to grade to be done by CITY'S contractor;

WHEREAS, the list of WEST BAY'S sanitary manhole covers needed to be adjusted to grade is shown on the Exhibit "A" attached;

NOW, THEREFORE, IT IS HEREBY AGREED by the parties hereto, as follows:

1. The CITY will include in the contract the above mentioned work to adjust to grade all WEST BAY sanitary manhole covers as more particularly shown in Exhibit "A".

2. The City has awarded the contract to O'Grady Paving, Inc., the lowest responsible bidder, for the complete construction project, including said grade adjustment of sanitary manhole covers.

3. WEST BAY agrees to reimburse the CITY for the total cost incurred by the CITY for performing the work requested by WEST BAY. The estimated cost for WEST BAY'S work is eighty six thousand nine hundred twenty dollars ($86,920.00). Said total cost includes six percent (6%) to reimburse the CITY for engineering and administrative expenses. Details of the cost are shown on Exhibit "A" attached. It is understood that the total sum to be reimbursed to the CITY shall be determined from actual costs to the CITY to adjust to grade the manhole covers plus six percent (6%) for administrative and engineering expenses. It is agreed that the CITY shall transmit to WEST BAY the invoice for the actual amount of work completed by the contractor and the value thereof for payment. Upon receipt of the invoice, WEST BAY agrees to reimburse the City within ten (10) working days for the work completed.

4. No change orders for WEST BAY'S portion of the work will be added without WEST BAY'S written consent.

5. WEST BAY shall have the option to exclude work specified herein from the CITY'S contract. If WEST BAY elects to exercise said option, WEST BAY shall notify the CITY in writing.

6. It is understood and WEST BAY agrees that upon completion of the work specified under this agreement, and mutual acceptance by the parties hereto, maintenance responsibilities for the improvements installed under this agreement shall vest in WEST BAY.

7. WEST BAY shall indemnify and hold harmless the CITY from all claims, suits, or action of every name, kind and description, arising out of or relating to the matters covered by this agreement to the extent such claims, suits or actions are due to the negligence or willful misconduct of WEST BAY or WEST BAY'S failure to perform obligations required of WEST BAY under this Agreement.

   The CITY shall indemnify and hold harmless WEST BAY from all claims, suits or action of every name, kind and description, arising out of or relating to the matters covered by this agreement to the extent such claims, suits or actions are due to the negligence or willful misconduct of CITY or CITY'S failure to perform obligations required of the CITY under this Agreement.

   The duty to indemnify and hold harmless includes duties to defend as set forth in Section 2778 of the California Civil Code.

8. WEST BAY shall inspect and approve the raising of all sanitary manhole covers to grade and all work shall conform to the approved plans, details and specifications.

IN WITNESS WHEREOF, the parties hereto have caused this Agreement to be executed by their duly authorized officers on the day and year first above written.

"WEST BAY" WEST BAY SANITARY DISTRICT

By _____
Manager

"CITY" CITY OF MENLO PARK

By _____
Christopher Lamm, Assistant Public Works Director

EXHIBIT "A"

NUMBER OF WEST BAY SANITARY MANHOLES TO BE ADJUSTED TO GRADE

2019 STREET RESURFACING PROJECT
CITY PROJECT No. 20-010

Street No.	STREET	FROM	TO	Manholes
1	Trinity Dr NB	580' N of Klamath Dr	Tioga Dr	7
2	Eastridge Ave	Sharon park Dr	Monte Rosa Dr	2
3	Harkins Ave	City Limit	Altschul Ave	2
4	Grace Dr	Oakdell Dr	End of Grace Dr	2
5	Hillview Place	Hillview Dr	Hillview Place End	1
6	San Mateo Ave	Santa Cruz Ave	Middle Ave	9
7	Wallea Dr	San Mateo Dr. S end	San Mateo Dr N end	7
8	Cathy Place	Wallea Dr	Cathy Place End	1
9	Valparaiso Dr	Cotton St	Victoria Dr	-
10	Alma St	Mielke Dr	Burgess Dr	3
11	Shirley Wy	Gilbert Ave	End of Shirley Wy	1
12	Hollyburne Ave	Bay Rd	Van Buren Rd	3
13	Sonoma Ave	Bay Rd	Oakwood Place	1
14	Marsh Rd	Bay Road	Bohannon Dr	10
15	Bohannon Rd	Campbell Ave	Marsh Rd	-
16	Bohannon Rd	1110' S of Scott Dr	Campbell Ave	1
17	Bieber Ave	Plumas Dr	Market Place	1
18	Market Pl	Ivy Dr	Alpine Ave	2
19	Market Place	Ivy Dr	Pierce Rd	1
20	Hamilton Dr	Modoc Ave	Almanor Ave	1
21	O'brien Dr	Casey Ct	Willow Rd	9
22	Bellair Wy	Avy Ave	City limit	6

23	Harkins Ave	Alameda de Las Pulgas	City limit	1
24	Santa Monica Ave	95 East of San Luis Dr	San Clemente	3
25	Henderson Ave	Newbridge St	Ivy Dr End	-
26	Noel Dr	Ravenswood Ave	Laurel St	5
27	Tioga Dr	Continental Dr	Lassen Dr	3

Total:	82
Price per each:	$ 1,000.00
SUB-TOTAL:	$82,000.00
Add 6% Administration / Engineering:	$ 4,920.00
TOTAL:	**$86,920.00**

Public Works
Received
JUL 8 2019
West Bay Sanitary District

July 1, 2019

CITY OF MENLO PARK

Phil Scott
District Manager
West Bay Sanitary District
500 Laurel Street
Menlo Park, CA 94025

Re: 2019 Street Resurfacing Project
Subject: Adjustment of Sanitary Sewer Utility Covers to Grade

Dear Mr. Scott:

Construction is about to begin on the City of Menlo Park's 2019 Street Resurfacing Project. The project includes asphalt-concrete grind and overlay work that will require utility covers to be adjusted to the new pavement surface. Our plans indicate that a number of West Bay manhole frames and covers will need to be adjusted to grade (see Agreement and attached Exhibit "A" enclosed).

It is my understanding that as part of previous City road pavement projects West Bay has agreed to have the City contractor adjust to grade its manhole covers at the contract bid price. For this project, contract bid prices are as follows:

Adjust or replace manhole frames and covers	$1,000.00 each
Adjust or replace frame/covers of clean-outs, monuments & valves	$800.00 each

The General Contractor for this project is O'Grady Paving, Inc. who will also perform the adjustment to grade of utilities. Should West Bay wish to have the City's contractor adjust to grade its impacted manhole frame and covers, enclosed find three copies of an agreement for this purpose. If you wish to proceed in this manner, please sign and return all three copies for execution. One copy of the fully executed agreement will then be returned to you for your records. Should West Bay rather make alternative arrangements to raise its manhole covers, please advise and arrange to do so by July 16, 2019.

If you have any questions, please contact me directly at (650) 330-6761.

Sincerely,

Rodolfo Ordonez
Associate Engineer

cc: Justin Murphy, Christopher Lamm, Karen Pachmayer, Rene Punsalan, File

Encl.: Agreement Between Menlo Park and West Bay Sanitary District
Exhibit "A" – Number of West Bay Sanitary Manhole to Be Adjusted to Grade

To: ***Board of Directors***

From: ***Phil Scott, District Manager***

Subject: ***Discussion and Direction on Recycled Water Projects – Sharon Heights and Bayfront, Including Project Status***

A discussion will be held on the Recycled Water Projects – Sharon Heights and Bayfront Facility and other events related to the recycled water project including financing, design/build issues and grant applications. The Board will have opportunity to provide direction to staff and legal counsel.

The following is a disclosure statement required for any document, written report or brochure prepared in whole or in part pursuant to the Finance Agreement with the State Water Resources Control Board for the West Bay Sanitary District Recycled Water Project - Sharon Heights:

Funding for this project has been provided in full or in part through an agreement with the State Water Resources Control Board. California's Clean Water State Revolving Fund is capitalized through a variety of funding sources, including grants from the United States Environmental Protection Agency and state bond proceeds. The contents of this document do not necessarily reflect the views and policies of the foregoing, nor does mention of trade names or commercial products constitute endorsement or recommendation for use.

THIS PAGE LEFT INTENTIONALLY BLANK

WEST BAY SANITARY DISTRICT
AGENDA ITEM 10

To: ***Board of Directors***

From: ***Phil Scott, District Manager***

Subject: ***Report & Discussion on South Bayside Waste Management Authority (SBWMA)***

The District's representative to South Bayside Waste Management Authority (SBWMA), President Fran Dehn, will report on the June 27, 2019 meeting as well as any pertinent items regarding SBWMA business.

BOARD OF DIRECTORS

THURSDAY, June 27, 2019 at 2:00 p.m.

San Carlos Library, Conference Room A/B
610 Elm Street, San Carlos, CA 94070

AGENDA

1. Call to Order/Roll Call

2. Public Comment

   Persons wishing to address the Board on matters NOT on the posted agenda may do so. Each speaker is limited to two minutes. If there are more than five individuals wishing to speak during public comment, the Chairman will draw five speaker cards from those submitted to speak during this time. The balance of the Public Comment speakers will be called upon at the end of the Board Meeting. If the item you are speaking on is not listed on the agenda, please be advised that the Board may briefly respond to statements made or questions posed as allowed under The Brown Act (Government Code Section 54954.2). The Board's general policy is to refer items to staff for attention, or have a matter placed on a future Board agenda for a more comprehensive action or report and formal public discussion and input at that time.

3. Executive Director's Report p. 5

4. Approval of Consent Calendar

   Consent Calendar item(s) are considered to be routine and will be enacted by one motion. There will be no separate discussion on these items unless members of the Board, staff or public request specific items be removed for separate action. *Items removed from the Consent Calendar will be moved to the end of the agenda for separate discussion*.

   A. Approval of Minutes from the May 23, 2019 Board of Directors Meeting ACTION p. 35
   B. Resolution Approving an SBWMA Environmentally Preferable Purchasing and Practices Policy ACTION p. 43
   C. Resolution Authorizing the Executive Director to Execute a not-to-exceed $128,620 Contract with Tanner Pacific for Construction Management services at the Shoreway facility for FY19/20 ACTION p. 51
   D. Resolution Approving Findings of the Annual Financial and Operational Audits ACTION p. 67
   E. Resolution Approving a Contract Amendment to the Agreement with Stradling Yocca Carlson & Rauth for Bond and Disclosure Counsel Services for the SBWMA's Issuance of 2019 Solid Waste Revenue Bonds ACTION p. 81
   F. Resolution Approving Amendment 1 to the Agreement with Recology for Relocation of Organics Extrusion Recovery System & Purchase of Organics Polishing System ACTION p. 85
   G. Resolution Approving Reallocation of Budgeted Mid-Year Reserves ACTION p. 89
   H. Resolution Approving a Change in the Deductible Amount to the Shoreway Environmental Center's Property/Fire Insurance Policy for FY19/20 ACTION p. 93

5. Administration and Finance

   A. Resolution Approving the FY19/20 SBWMA Operating Budget and 5-Year Capital Improvement Plan ACTION p. 99
   B. Staff Update and Review of 2020-2024 Long-Range Plan p. 129

6. Collection and Recycling Program Support and Compliance

   A. Resolution Approving Amendment One Modifications to the Model Amended and Restated Recology Franchise Agreement ACTION p. 135

      Presentation by Matt Fabry, C/CAG Countywide Stormwater Program Manager

7. Shoreway Operations and Contract Management
   A. Approving a Contract with BHS, Inc. to 1. replace and install optical sorter hardware and software and 2. replace existing sort system electrical controls and software for a not-to-exceed amount of $770,500 ACTION p. 183
   B. Resolution Approving a Not-to-Exceed Contract for $717,950 with BHS, Inc. for the Design & Engineering of Phase I MRF Upgrades Project ACTION p. 187
   C. Resolution approving payment of $77,420 for MRF Debris Roll Screen replacement and installation ACTION p. 193
   D. Review of TAC direction regarding agency options as they relate to the current Shoreway Operations Agreement with South Bay Recycling which expires on December 31, 2020 p. 199

8. Public Education and Outreach
   A. Staff Update on the Public Spaces Pilot Program – Full Report p. 205
   B. Presentation by 6th Grader Christine Chang on her Metal Straws initiative in San Carlos p. 207

9. Informational Items Only (no action required)
   A. Legislative Session Update p. 217
   B. 2019 Finance and Rate Setting Calendar p. 223
   C. Check Register Detail for May 2019 p. 225
   D. Technical Consulting Contracts March16 -May 2019 p. 241
   E. Potential Future Board Agenda Items p. 243

10. Board Member Comments

11. Adjourn

THIS PAGE LEFT INTENTIONALLY BLANK

WEST BAY SANITARY DISTRICT
AGENDA ITEM 11

To: ***Board of Directors***

From: ***Phil Scott, District Manager***

Subject: ***Report & Discussion on Silicon Valley Clean Water (SVCW) and Discussion on SVCW CIP Program and Financing***

The District's representative to Silicon Valley Clean Water (SVCW), George Otte, will report on the July 15, 2019 meeting as well as any pertinent items regarding SVCW operations and CIP.

COMMISSION OF SILICON VALLEY CLEAN WATER
JOINT POWERS AUTHORITY
REGULAR MEETING – Monday, July 15, 2019
8:00 a.m.

Pelican Conference Room
Silicon Valley Clean Water
1400 Radio Road, 2nd Floor
Redwood City, California

COMMISSIONERS
COUNCIL MEMBER WARREN LIEBERMAN, PhD., BELMONT – CHAIR
COUNCIL MEMBER ALICIA AGUIRRE, REDWOOD CITY – VICE CHAIR
BOARD MEMBER GEORGE OTTE, P.E., WEST BAY SANITARY DISTRICT – SECRETARY
MAYOR MARK OLBERT, SAN CARLOS – MEMBER

MANAGER: TERESA A. HERRERA
ATTORNEY FOR THE AUTHORITY: CHRISTINE C. FITZGERALD
CONTROLLER: KIMBRA MCCARTHY
TREASURER: MATTHEW ANDERSON

AMERICANS WITH DISABILITIES ACT
In compliance with the Americans with Disabilities Act, if you need special assistance to participate in this meeting, please contact SVCW (650) 591-7121. Notification in advance of the meeting will enable the Authority to make reasonable arrangements to ensure accessibility to this meeting.

AGENDA

1. CALL TO ORDER

2. ROLL CALL

3. PLEDGE OF ALLEGIANCE

4. PUBLIC COMMENT
   Any member of the public may address and ask questions of the Chair under this item relating to any matter within the Commission's jurisdiction that does not appear as a separate item on the Agenda. An opportunity will be provided for members of the public to address the Chair and ask questions about any item that is listed on the agenda at the time the Commission considers the item and before action is taken. If you address the Commission on a non-agenda item, please be aware that the Ralph M. Brown Act (Gov. C. § 54950 et seq.)

prohibits the Commission from acting on or discussing such matters at this meeting. Any such item may be referred to staff for a decision with regard to placing it on a future agenda for discussion, action or a report.

5. SAFETY MOMENT and REPORTS
   A. Safety Moment
   B. Manager's Report
   C. Financial Reports
      1. Investment Report
   D. Engineering Projects Status Update
   E. Commission Requested Staff-Level Action Items
   F. RESCU Program Design-Build Project Status Update

6. MATTERS OF COMMISSION MEMBER'S INTEREST
   A. Election of New Chairperson, Vice Chairperson and Appoint New Secretary

7. CONSIDERATION OF MOTION APPROVING CONSENT CALENDAR

8. BUSINESS ITEMS

   A. CONSIDERATION OF RESOLUTION APPROVING ANNUAL SALARY FOR FISCAL YEAR 2019-2020 AND BONUS FOR FISCAL YEAR 2018-2019 FOR THE MANAGER OF SILICON VALLEY CLEAN WATER.

      Proposed Action:
      Move adoption of RESOLUTION APPROVING ANNUAL COMPENSATION FOR THE SILICON VALLEY CLEAN WATER MANAGER

9. CLOSED SESSION

   A. PUBLIC EMPLOYEE PERFORMANCE EVALUATION (Government Code §54957)
      Title: Manager
   B. CONFERENCE WITH REAL PROPERTY NEGOTIATORS
      Pursuant to Government Code Section 54956.8
      Property Description: San Carlos Airport Property, various locations
      SVCW Negotiators: SVCW Authority Engineer, Kimberley Hackett; Bruce Burnworth (MPF Consulting, Inc.)
      Negotiating Parties: County of San Mateo
      Under Negotiation: Price and terms

10. RECONVENE IN OPEN SESSION – Announce action taken in Closed Session, if any.

11. ADJOURN

CONSENT CALENDAR

NOTICE TO PUBLIC

All matters listed under CONSENT CALENDAR are considered to be routine. There may be discussion on items on the CONSENT CALENDAR. All items will be enacted by one motion with a roll call vote unless members of the Commission, staff, or public request specific items be removed from the CONSENT CALENDAR for separate action.

7. A. APPROVAL OF MINUTES – June 17, 2019 Meeting

B. CONSIDERATION OF MOTION APPROVING CLAIMS AND CHECKS DATED JUNE 14, 2019, JUNE 28, 2O19, AND JULY 1, 2019 AND NECESSARY PAYMENTS THROUGH JULY 1, 2019

C. CONSIDERATION OF RESOLUTION APPROVING AND AUTHORIZING ACCEPTANCE OF A CERTAIN HEREIN DESCRIBED REAL PROPERTY INTEREST FOR THE GRAVITY PIPELINE PROJECT AND AUTHORIZING EXECUTION OF ALL DOCUMENTS NECESSARY AND APPROPRIATE FOR SAID TRANSACTION (APN 095-450-020)

Proposed Action:
Move adoption of RESOLUTION ACCEPTING CONVEYANCE OF AN EASEMENT INTEREST IN CERTAIN REAL PROPERTY HEREIN DESCRIBED (APN 095-450-020)

D. CONSIDERATION OF MOTION APPROVING CONTRACT CHANGE ORDER FOR THICKENING IMPROVEMENTS – PHASE 1 PROJECT (CIP #9168)

Proposed Action:
Move approval of CONTRACT CHANGE ORDER FOR THICKENING UPGRADE PHASE 1 (CIP #9168) IN THE AMOUNT OF $84,703 AND AUTHORIZE MANAGER TO APPROVE UP TO TEN PERCENT CONTINGENCY FOR ADDITIONAL WORK ON AN AS-NEEDED BASIS – C. OVERAA CO.

WEST BAY SANITARY DISTRICT
AGENDA ITEM 13

To: ***Board of Directors***

From: ***Phil Scott, District Manager***

Subject: ***Consideration to Approve and Adopt the Memorandum of Understanding Between West Bay Sanitary District and the Sanitary Truck Drivers and Helpers International Brotherhood of Teamsters, Local 350 and Authorize the President of the District Board to Execute the Memorandum of Understanding***

Background

Terms of a Memorandum of Understanding (MOU) between the District and Teamsters Local 350 are scheduled and anticipated to be approved by secret ballot.

Analysis

The MOU is attached and presented to the Board for review and action. It is expected that the Teamsters will execute and return the MOU in advance of the July 17, 2019, Board meeting.

If this MOU is adopted, a Resolution is required to adjust the specific salary ranges, cafeteria plan, and retirement contributions etc., for represented employees, and also in the same manner for unrepresented employees.

Fiscal Impact

Salaries and employee benefits will increase per the terms of the MOU. Pension contributions made by the District and employees are stated in the MOU.

Recommendation

Provided an executed and or ratified MOU is received prior to the July 17, 2019, Board meeting, the District Manager recommends adoption of the MOU, with authorization to make administrative edits as deemed necessary and approved by legal counsel.

WEST BAY SANITARY DISTRICT
AGENDA ITEM 14

To: ***Board of Directors***

From: ***Phil Scott, District Manager***

Subject: ***Consider Adoption of Resolution Establishing Rates of Pay and Related Compensation Provisions***

Background

On July 17, 2019, the Board is anticipated to adopt a Memorandum of Understanding (MOU) between the District and Teamsters Local 350. The provisions in this MOU include agreed pay increases, effective July 1, 2019. Increases are determined for the five-year term of the MOU. The 4% increase per year is effective on July 1, 2019 and is based on the approved MOU.

On January 9, 2019 the Board approved a temporary salary adjustment to the Accountant position through Resolution No. 2132. The temporary salary adjustment is included in the proposed rate of pay increase schedule but will expire on July 24th, 2019 as stated in the said resolution.

Analysis

The attached Resolution is required to adjust the individual salary ranges and related compensation provisions for represented, unrepresented, and management employees which includes the new salary ranges.

In order to promote the retention of “Critical Positions” within the District, the District Manager requests an allotment of 1-1/2% of base salaries for the positions deemed critical to be distributed at the District Manager’s discretion based on achievement of performance goals established for the individuals within the category. This requires the following resolution to authorize the District Manager to exceed the salary ranges for individuals within this category up to 1-1/2%. Positions deemed critical are determined by recommendation of the District Manager in consultation with the District Board.

Fiscal Impact

Salaries and employee benefits will increase per the terms of the MOU. Employees will contribute to the employer's PERS portion at a rate of .25% per year affective July 1, 2019. Effective July 1, 2020, 0.5%; effective July 1, 2021, 0.75%; effective July 1, 2022, 1.00%; and effective July 1, 2023 1.25%. Additionally, the employee shall pay to PERS the employee's portion of the total required contribution (i.e. 8% of pay for Classic and 6.2% of pay for PEPRA staff).

Recommendation

Provided the Board adopts the MOU in a prior Agenda Item within the Board meeting, the District Manager recommends adoption of the attached Resolution.

RESOLUTION NO. ____(2019)

RESOLUTION ESTABLISHING RATES OF PAY AND RELATED COMPENSATION PROVISIONS FOR CERTAIN EMPLOYEES OF THE WEST BAY SANITARY DISTRICT

***

BE IT RESOLVED BY THE DISTRICT BOARD OF THE WEST BAY SANITARY DISTRICT, COUNTY OF SAN MATEO, STATE OF CALIFORNIA, AS FOLLOWS:

1. Executive Employees (FLSA exempt). The following monthly salary rates in dollars are hereby established for each of the employee positions within the executive employee category as hereinafter set forth, and the individuals duly appointed to said positions of employment shall be compensated at such rates for all services rendered to this District.

Position	Salary Rate
District Manager	Established by the District Board

2. Management Employees (FLSA exempt). The following monthly salary rates in dollars are hereby established for each of the employee positions within the management employee category as hereinafter set forth, and the individuals duly appointed to said positions of employment shall be compensated at such rates for all services rendered to this District.

Position	Salary Rate
Projects & IT Manager	10349 - 14487
Operations Superintendent	9640 - 13978
Regulatory Compliance Coordinator	9351 - 12625
Finance Manager	10202 - 13673
Office & Communications Manager	6396 - 9275
Accountant (Temporary) Exp.07/24/2019	10202 - 13673

3. General Employees (unrepresented). The following monthly salary rates in dollars are hereby established for each of the listed employee positions within the general employee (unrepresented) category as hereinafter set forth, and the individuals duly appointed to said positions of employment shall be compensated within such rates for all services rendered to this District.

Position	Salary Rate
Assistant Operations Superintendent	8354 - 11279
Pump Facility Supervisor	8419 - 10892
Operations Supervisor	8419 - 10892
Information Technology Analyst	6215 - 9325
Engineering Technician	7341 - 10228
Personnel & Accounting Specialist	6448 - 8415
Senior Administrative Technician Position ends 7/20/19	5523 - 8009
Administrative Technician	5245 - 7343
Part-Time Clerical Assistant	19.86 – 24.27/hour

4. General Employees (represented). The following monthly salary rates in dollars are hereby established for each of the listed employee positions within the general employee (represented) category as hereinafter set forth, and the individuals duly appointed to said positions of employment shall be compensated within such rates for all services rendered to this District.

Position	Salary Rate
Construction Inspector	7339 - 10229
Source Control Inspector	7339 - 10229
Field Supervisor	6115 - 9325
Rehabilitation Technician	5615 - 8336
Pipeline Inspection Tech	5615 - 8336
Pump Station Maintenance Mechanic	5615 - 8336
Maintenance Worker	5099 - 7343
Temporary Maintenance Worker	25.00/hour

5. Health Benefits Plan.

(a) Subject to all terms and conditions of any agreement which may be entered into between this District and any organization or organizations offering health, dental and/or vision insurance and the provisions of the Public Employees' Medical and Hospital Care Act, the District shall contribute for each employee enrolled the amount necessary to pay for the full cost of his or her enrollment, including the enrollment of his or her family members in a health benefits plan up to the amount required pursuant to Section 22892 of the Government Code.

(b) Subject to all terms and conditions of any agreement which may be entered into between this District and any organization or organizations offering health, dental and/or vision insurance and the provisions of the Public Employees' Medical and Hospital Care Act, the District shall contribute for each annuitant the amount required pursuant to Section 22892 of the Government Code.

(c) The District may, at its sole discretion, enter into, amend, or cancel any agreement between this District and any organization or organizations offering health, dental and/or vision insurance.

6. Optional Benefits Package ("Cafeteria Plan"). Subject to all terms and conditions of any agreement which may be entered into at the employees' option between employees and any organization offering either health, dental, vision and/or universal life insurance benefits, the District shall pay to all represented and unrepresented employees the amount specified in the adopted Memorandum of Understanding Between the West Bay Sanitary District and Teamsters Local 350 adopted by the Board of Directors for the premium of such optional benefits attributable to management, represented, and unrepresented employees of the District.

7. Life Insurance. Subject to all terms and conditions of any agreement which may be entered into between this District and any organization or organizations offering life insurance coverage benefits, the District shall furnish to each employee general life

insurance coverage, the face amount of which shall be equal to one and a half (1.5) times the annual salary of the employee.

8. Deferred Compensation. The District will provide matching contributions for unrepresented employees at a one (1) to 0.75 ratio to a maximum of 2% of salary. I.E. If an employee contributes 2.667% of their salary to a 457 Deferred Compensation plan the District will contribute 2% of salary equivalent to the employee's 457 Deferred Compensation plan.

9. Retention Plan. In order to promote the retention of "Critical Positions" within the District, the District Manager is authorized to exceed the salary ranges for individuals within this category up to 1-1/2% of base salaries for the positions deemed critical to be distributed at the District Manager's discretion based on achievement of performance goals established for the individuals within the category. Positions deemed critical are determined by the District Manager in consultation with the District Board.

10. Retirement Plan. Subject to the provisions of this Resolution, retirement benefits for employees qualifying therefore shall be provided in accordance with, and pursuant to that certain contract between the Board of Administration of the Public Employees' Retirement System ("PERS") of the State of California and the District Board of this District, and amendments thereto approved by Resolution No. 628, adopted March 26, 1973 and subsequent Resolutions.

Subject to other provisions of the contract and Resolutions referred to above, the District shall pay to PERS the employer portion. Employees will contribute to the employer's PERS portion at a rate of .25% per year affective July 1, 2019. Effective July 1, 2020, 0.5%; effective July 1, 2021, 0.75%; effective July 1, 2022, 1.00%; and effective July 1, 2023 1.25%. Additionally, the employee shall pay to PERS the employee's portion of the total required contribution (i.e. 8% of pay for Classic and 6.2% of pay for PEPRA staff).

11. Interpretation. The provisions of the Resolution shall be administered and interpreted in accordance with and pursuant to Resolution No. 759 of this District, adopted June 13, 1977 (and as amended). Nothing herein shall be deemed a limitation upon any other term and condition of employment, or agreements, or provisions relating thereto, except as specifically herein contained.

12. Effective Date. This Resolution shall be effective on July 1, 2019.

BE IT FURTHER RESOLVED that any and all previously adopted Resolutions or provisions thereof in conflict with the provisions herein contained, be and are hereby, rescinded.

******

Passed and adopted by the District Board of the West Bay Sanitary District at a special meeting thereof held on the 17th day of July, 2019 by the following vote:

AYES:

NOES:

ABSTAIN:

ABSENT:

_____
President of the District Board of the
West Bay Sanitary District of San Mateo
County, State of California

Attest:

_____
Secretary of the District Board of the
West Bay Sanitary District of San Mateo
County, State of California